SHEET OF

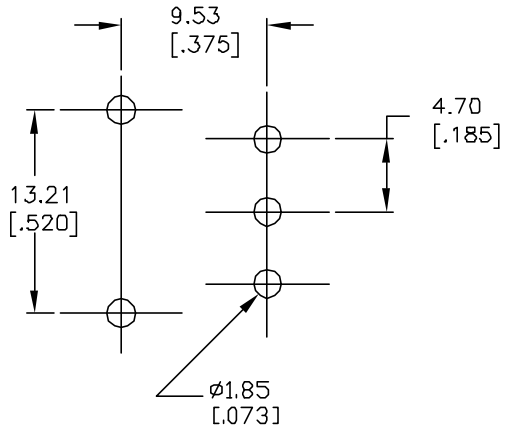

RECOMMENDED P.C.B. LAYOUT

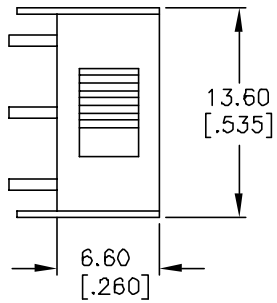

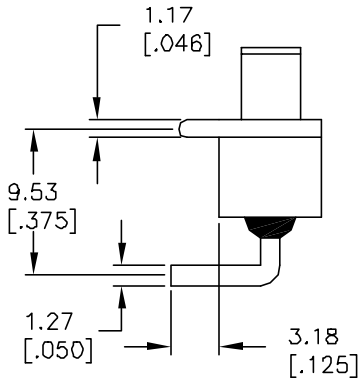

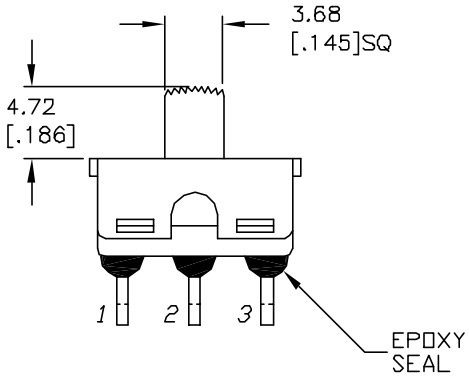

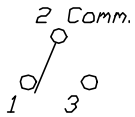

CONTACT CONFIGURATION

ON	NONE	ON

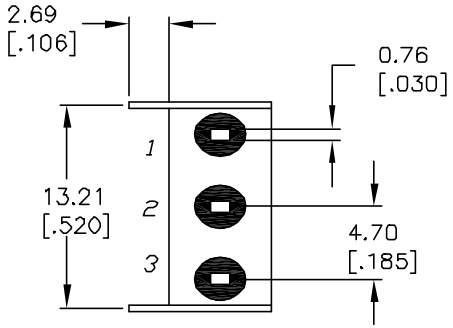

NOTE:
CONTACTS CROPPED
FOR CLARITY

NOTES:

1. ALL DIMENSIONS IN MM [INCH]
2. GENERAL TOLERANCE: X.X=±0.4
   X.XX=±0.25
3. TERM. NOS. FOR REFERENCE ONLY.
4. CONTACT MATERIAL: GOLD PLATE OVER COPPER ALLOY
5. CONTACT RESISTANCE: 10mΩ TYP.
6. ELECTRICAL LIFE: 30,000 ACTUATIONS AT FULL LOAD
7. INSULATION RESISTANCE: 1,000 MΩ min.
8. DIELECTRIC STRENGTH: 1,000 V RMS @ SEA LEVEL
9. OPERATING TEMPERATURE: −30°C TO 85°C

REV.	ECN No.	DESCRIPTION	DATE	CHKD
B	11946	REVISED AND REDRAWN	1/25/02	CJC

E-SWITCH®

TITLE 500 SSP 1 S1 M6 R E A

SCALE	DATE	DR	DWG	REV
2:1	1/25/02	CJC	T511001	B