TOP VIEW

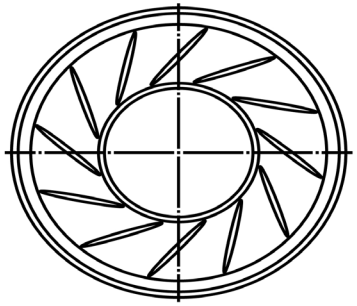

SIDE VIEW

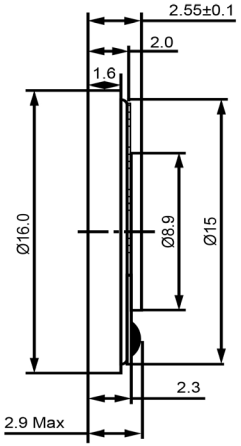

BOTTOM VIEW

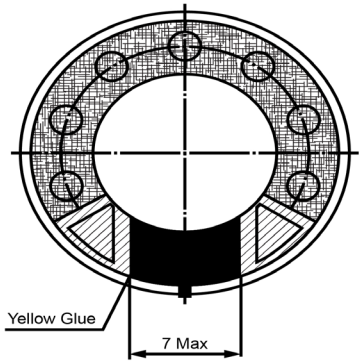

Specifications

Description	Value	Unit
Shape	Round	
Resonant Frequency	880	(Hz)
Frequency Range	880 ~ 20,000	(Hz)
SPL @ 10cm	85	(dBA)
Impedance	16	(Ohm)
Cone Material	Polyethylene Naphthalate	
Nominal Power	0.3	(W)
Max Power	0.6	(W)
Mount Type	Flush Mount	
Operating Temperature	-30 ~ +80	°C
Storage Temperature	-30 ~ +80	°C
Weight	1	(g)

Notes

1) All dimensions are in mm unless otherwise noted
2) All parts meet RoHS

DB UNLIMITED

Revision History

Version	Description	Date	Approved
1	Released from Engineering	2/5/2014	J.S.

Drawn by	Date	Checked by	Date	Approved by	Date
G.W.	1/27/2014	C.E.	2/4/2014	J.S.	2/5/2014

High Temp Dynamic Speaker

SM160816-1

sales@dbunlimitedco.com | www.dbunlimitedco.com
©2014, DB Unlimited