THIS COPY IS PROVIDED ON A RESTRICTED BASIS AND IS NOT TO BE USED IN ANY WAY DETRIMENTAL TO THE INTERESTS OF PANDUIT CORP.

PANDUIT PART #	WIRE RANGE AWG [mm²]	TAB SIZE in. [mm]	COLOR	MAX. INSUL. in. [mm]	DIMENSIONS in. [mm]	
					L ± .03 [0,8]	W ± .01 [0,3]
EDV18-250P	#22-18 [0,5-1,0]	.250 X .032 [6,4 X 0,8]	RED	.13 [3,3]	.88 [22,4]	.29 [7,4]
EDV14-250P	#16-14 [1,5-2,5]		BLUE	.16 [4,1]	.88 [22,4]	.29 [7,4]

NOTES:

1. USED FOR:
   A. STRANDED COPPER WIRE ONLY
   B. 194°F [90°C] MAX. OPERATING TEMPERATURE
   C. 300 V. MAX VOLTAGE RATING
2. MATERIAL:
   A. STAMPING: BRASS, TIN PLATED
   B. HOUSING: VINYL
   C. SLEEVE: BRASS, TIN PLATED
3. INSTALLATION TOOLS: CT-100A, CT-160, CT-260, CT-400, CT-1550, CT-1551, CT-2500 (CT-2550CH), CT-600A (CT-550CH)
4. WIRE STRIP LENGTH: 1/4" $^{+1/32}_{-0}$ [6,3mm $^{+0,8}_{-0}$]
5. SEE www.panduit.com FOR PACKAGE QUANTITIES INDICATED BY PART NUMBER SUFFIX
6. DIMENSIONS IN BRACKETS ARE METRIC EQUIVALENT

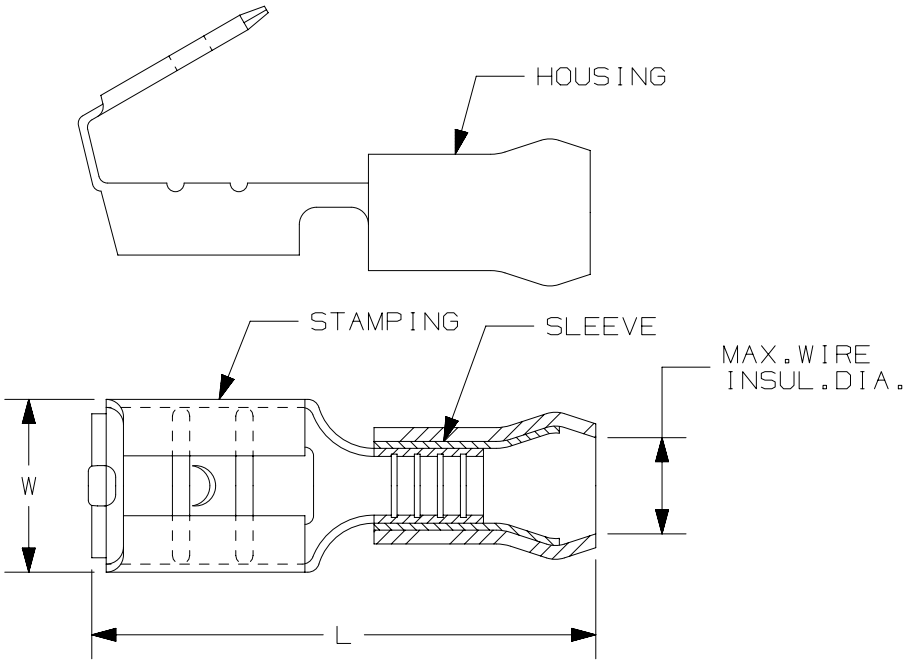

REV	DATE	BY	CHK	APR	DESCRIPTION	ECN
00	2/18	JHNU	TMR	RGB	RELEASED	00123SH

TITLE

STRONGHOLD PIGGYBACK DISCONNECT
VINYL INSULATED, METAL SLEEVE #22-14 AWG

CUSTOMER DRAWING

ITEM REVISION NAME: 00123STA/00

DATASET FILE NAME: 00123STA_DC/00

UNLESS OTHERWISE SPECIFIED, DIMENSIONAL TOLERANCES ARE: IN [mm]
.X ± .1 [2.54] .XXX ± .005 [.127]
.XX ± .01 [.25] ANGLES ± 5 °

THIRD ANGLE PROJECTION

MATERIAL: SEE NOTES

DRAWING NUMBER: SH41208

DRAWN BY	DATE	CHK	SCALE	SHT 1 OF 1	SIZE
TMR	2/18	TMR	NTS		A

D10100DA/15