X= CONTACT FACTORY	ASSEMBLY ITEM NUMBER	PART CHARACTERISTICS NUMBER OF POSITION
	43640-0208	02
	43640-0308	03
	43640-0408	04
X		05
	43640-0608	06
	43640-0708	07
X		08
X		09
X		10
X		11
X		12

CKT. NO.	DIM. "A"	DIM. "B"	DIM. "C"	DIM. "D"
2	.270/6.85	.118/3.00	.284/7.21	.429/10.90
3	.388/9.85	.236/6.00	.402/10.21	.547/13.89
4	.506/12.85	.354/9.00	.520/13.21	.665/16.89
5	.624/15.85	.472/12.00	.638/16.21	.783/19.89
6	.742/18.85	.591/15.00	.756/19.21	.901/22.89
7	.860/21.85	.709/18.00	.874/22.20	1.019/25.88
8	.978/24.85	.872/21.00	.992/25.20	1.137/28.88
9	1.096/27.85	.945/24.00	1.110/28.20	1.255/31.88
10	1.215/30.85	1.063/27.00	1.229/31.22	1.373/34.87
11	1.333/33.85	1.181/30.00	1.347/34.22	1.491/37.87
12	1.451/36.85	1.299/33.00	1.465/37.22	1.609/40.87

NOTES:
1. HOUSING MATERIAL: UNFILLED NYLON, RATED UL94V-0, COLOR IS BLACK. (LOW-HALOGEN)
2. FINISH: NONE
3. PRODUCT SPECIFICATION: PS-43650
4. PACKAGING SPECIFICATION: PK-43640-003
5. THIS HOUSING MATES WITH MICRO-FIT RECEPTACLE #43645-****.
6. THIS HOUSING IS DESIGNED IN METRIC
7. THIS HOUSING TO BE USED WITH MOLEX MALE TERMINAL #43031-****.
8. PLUG DESIGNED FOR .062/1.57 TO .090/2.30 THICK STAMPED PANEL OR P.C.BOARD.
9. SEE SECTION "D"-"D" FOR TERMINAL ORIENTATION IN HOUSING.
10. SEE SHEET 2 FOR PLUG WITHOUT PANEL MOUNTS.
11. PANEL MOUNT FEATURES MUST LOCK ON SIDE OPPOSITE PUNCH SIDE FOR OPTIMUM RETENTION.
12. THIS PART CONFORMS TO CLASS B REQUIREMENTS OF COSMETIC SPECIFICATION PS-45499-002.

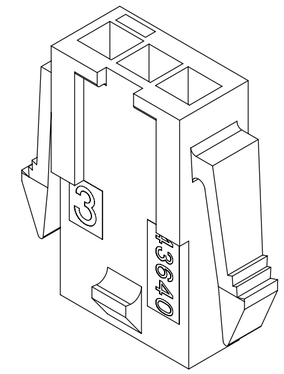

PLUG WITH PANEL MOUNTS

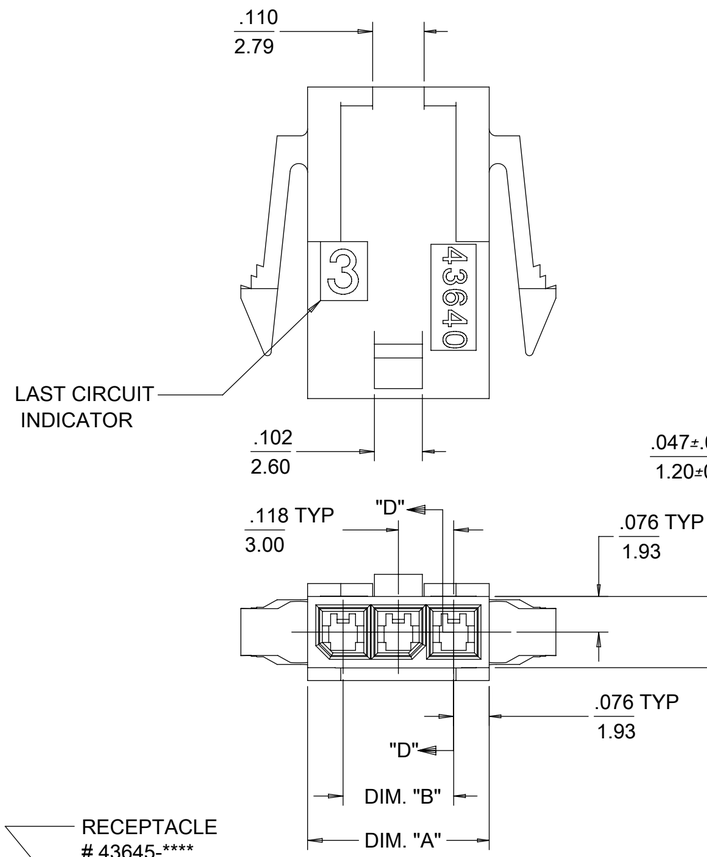

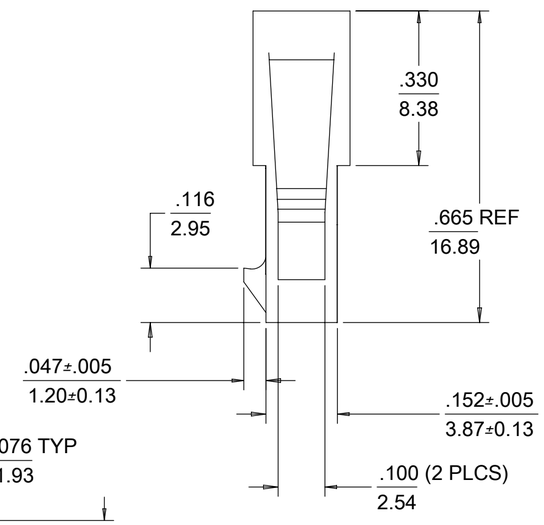

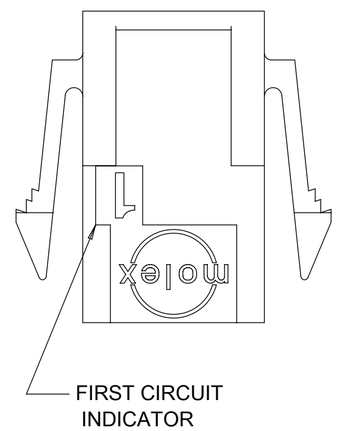

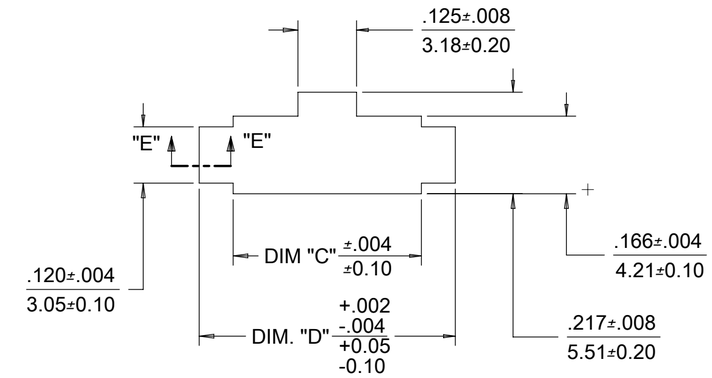

RECOMMENDED PANEL CUT-OUT
(SEE NOTES 8 & 11)

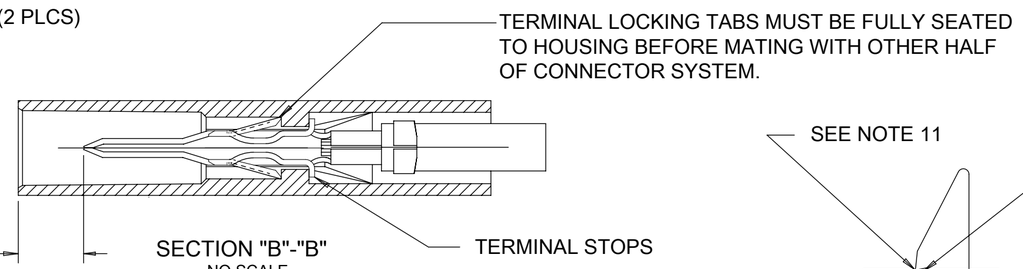

SECTION "B"-"B"
NO SCALE

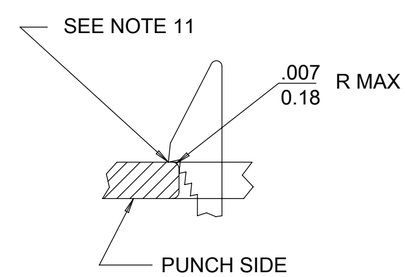

SECTION "E"-"E"
NO SCALE

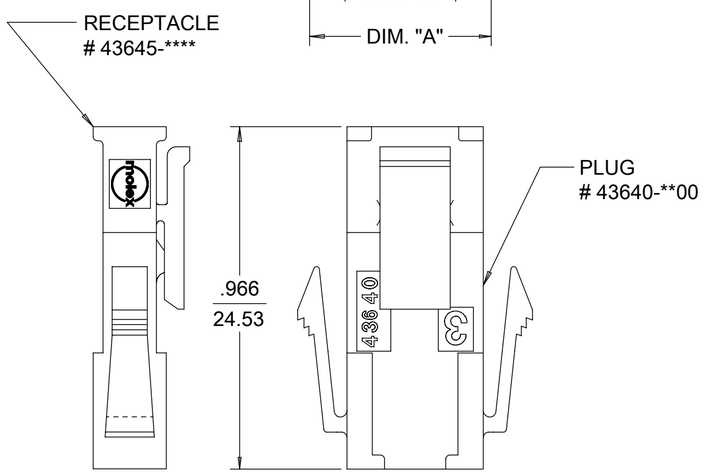

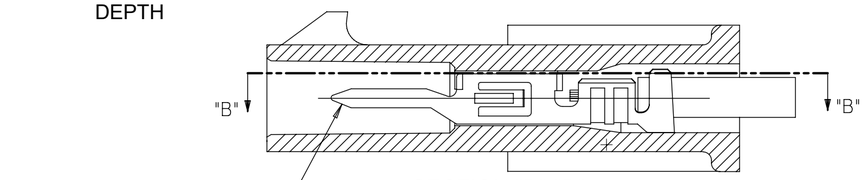

SECTION "D"-"D"
WITH TERMINAL
NO SCALE

MATED MICRO-FIT CONNECTOR

MODEL: EM-43640-300

RELEASE STATUS		RELEASE DATE	

QUALITY SYMBOLS	
EA	= 0
EC	= 0
EP	= 0
▼	= 0
C	= 0
☒	= 0
■	= 0
V	= 0

THIS DRAWING CONTAINS INFORMATION THAT IS PROPRIETARY TO MOLEX ELECTRONIC TECHNOLOGIES, LLC AND SHOULD NOT BE USED WITHOUT WRITTEN PERMISSION

UPDATE NOTE 1
EC NO: 111284 2016/10/05
DRWN: JQUILES 2016/12/22
CHK'D: SSOUSEK
APPR: FSMITH 2017/01/06
REV A5

GENERAL TOLERANCES (UNLESS SPECIFIED)

	MM	INCH
4 PLACES	±	±
3 PLACES	±	± 0.01
2 PLACES	± 0.25	± 0.014
1 PLACES	± 0.35	±
0 PLACES	±	±
ANGULAR TOL ± 5.0		

DRAFT WHERE APPLICABLE MUST REMAIN WITHIN DIMENSIONS

DIMENSION UNITS: IN/MM
SCALE: 4:1
DRWN BY: MKIPPER DATE: 2008/01/21
CHK'D BY: SSOUSEK DATE: 2008/01/30
APPR BY: FSMITH DATE: 2015/05/08
DRAWING SIZE: C
THIRD ANGLE PROJECTION

molex®

MICRO-FIT(3.0) IN-LINE PLUG, LOW HALOGEN WITH OPTIONAL PANEL MOUNTS

PRODUCT CUSTOMER DRAWING

SERIES	MATERIAL NUMBER	CUSTOMER
43640	SEE CHART	GENERAL MARKET

DOCUMENT NUMBER	DOC TYPE	DOC PART	SHEET NUMBER
SD-43640-001	PSD	000	1 OF 2

X= CONTACT FACTORY	ASSEMBLY ITEM NUMBER	PART CHARACTERISTICS NUMBER OF POSITION
	43640-0209	02
	43640-0309	03
	43640-0409	04
X		05
	43640-0609	06
	43640-0709	07
X		08
X		09
X		10
X		11
X		12

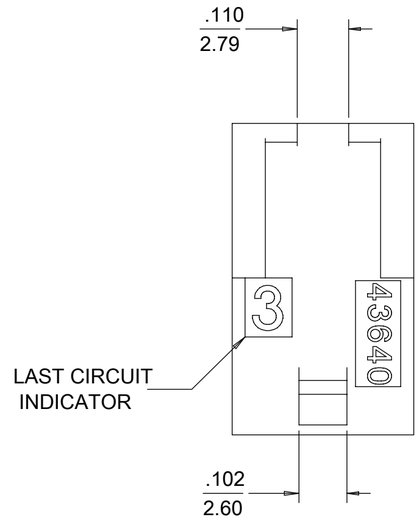

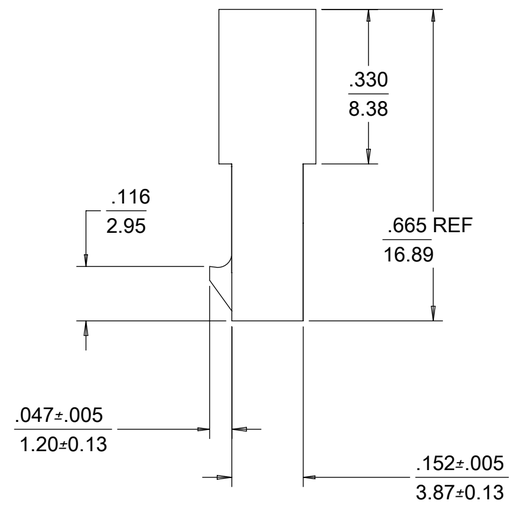

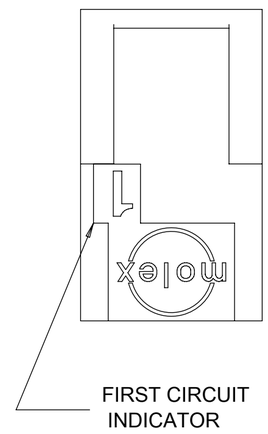

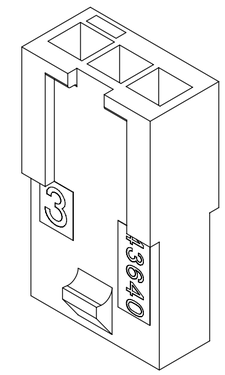

PLUG WITHOUT PANEL MOUNTS

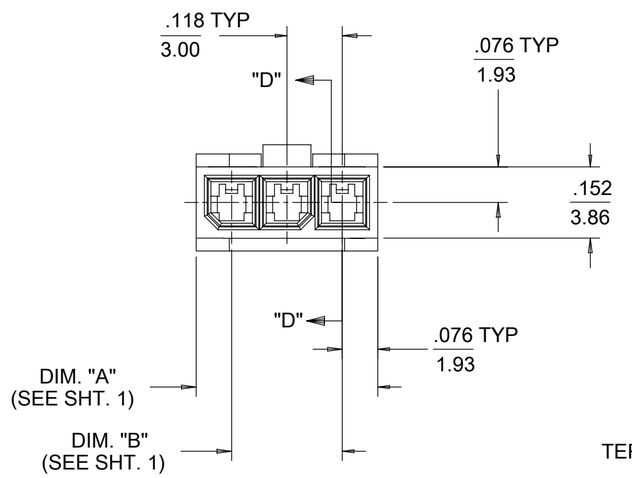

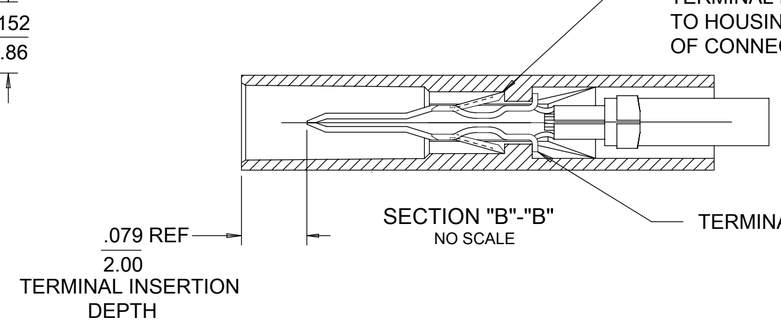

SECTION "B"-"B"
NO SCALE

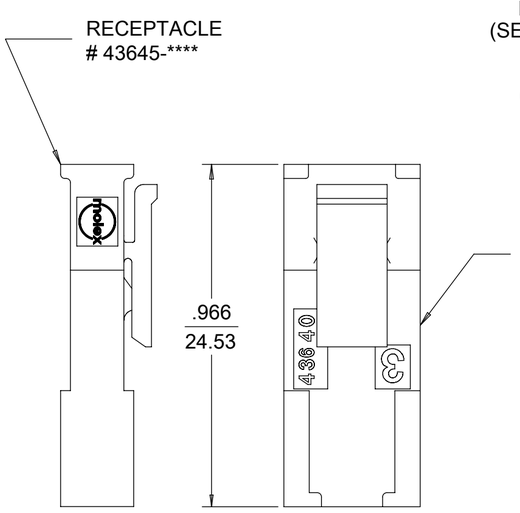

MATED MICRO-FIT CONNECTOR

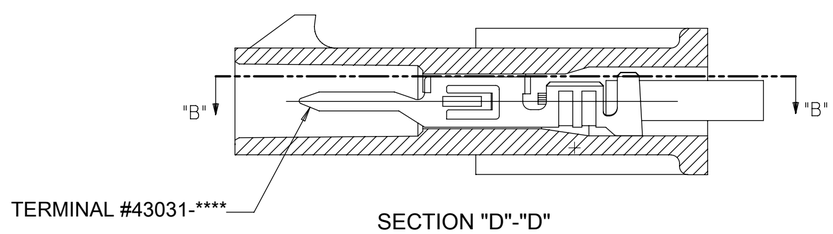

SECTION "D"-"D"
WITH TERMINAL
NO SCALE

MODEL: EM-43640-301

RELEASE STATUS		RELEASE DATE	

QUALITY SYMBOLS
FA = 0
FC = 0
FP = 0
▼ = 0
C = 0
☒ = 0
■ = 0
C = 0

THIS DRAWING CONTAINS INFORMATION THAT IS PROPRIETARY TO MOLEX ELECTRONIC TECHNOLOGIES, LLC AND SHOULD NOT BE USED WITHOUT WRITTEN PERMISSION

UPDATE NOTE 1
EC NO: 111284 2016/10/05
DRWN: JQUILES 2016/12/22
CHK'D: SSOUSEK
APPR: FSMITH 2017/01/06

GENERAL TOLERANCES (UNLESS SPECIFIED)

	MM	INCH
4 PLACES	±	±
3 PLACES	±	± 0.01
2 PLACES	± 0.25	± 0.014
1 PLACES	± 0.35	±
0 PLACES	±	±

ANGULAR TOL ± 5.0

DRAFT WHERE APPLICABLE MUST REMAIN WITHIN DIMENSIONS

REV A5

DIMENSION UNITS: IN/MM
SCALE: 4:1
DRWN BY: MKIPPER DATE: 2008/01/21
CHK'D BY: SSOUSEK DATE: 2008/01/30
APPR BY: FSMITH DATE: 2015/05/08
DRAWING SIZE: C
THIRD ANGLE PROJECTION

molex®

MICRO-FIT(3.0) IN-LINE PLUG, LOW HALOGEN WITH OPTIONAL PANEL MOUNTS

PRODUCT CUSTOMER DRAWING

SERIES	MATERIAL NUMBER	CUSTOMER
43640	SEE CHART	GENERAL MARKET

DOCUMENT NUMBER	DOC TYPE	DOC PART	SHEET NUMBER
SD-43640-001	PSD	000	2 OF 2

FORMAT: Eng-tega-master-tb-prod-C
REVISION: C
DATE: 2016/02/04