Alle Rechte vorbehalten/ *All rights reserved*

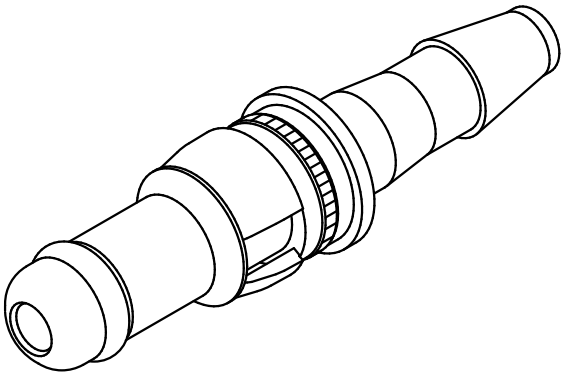

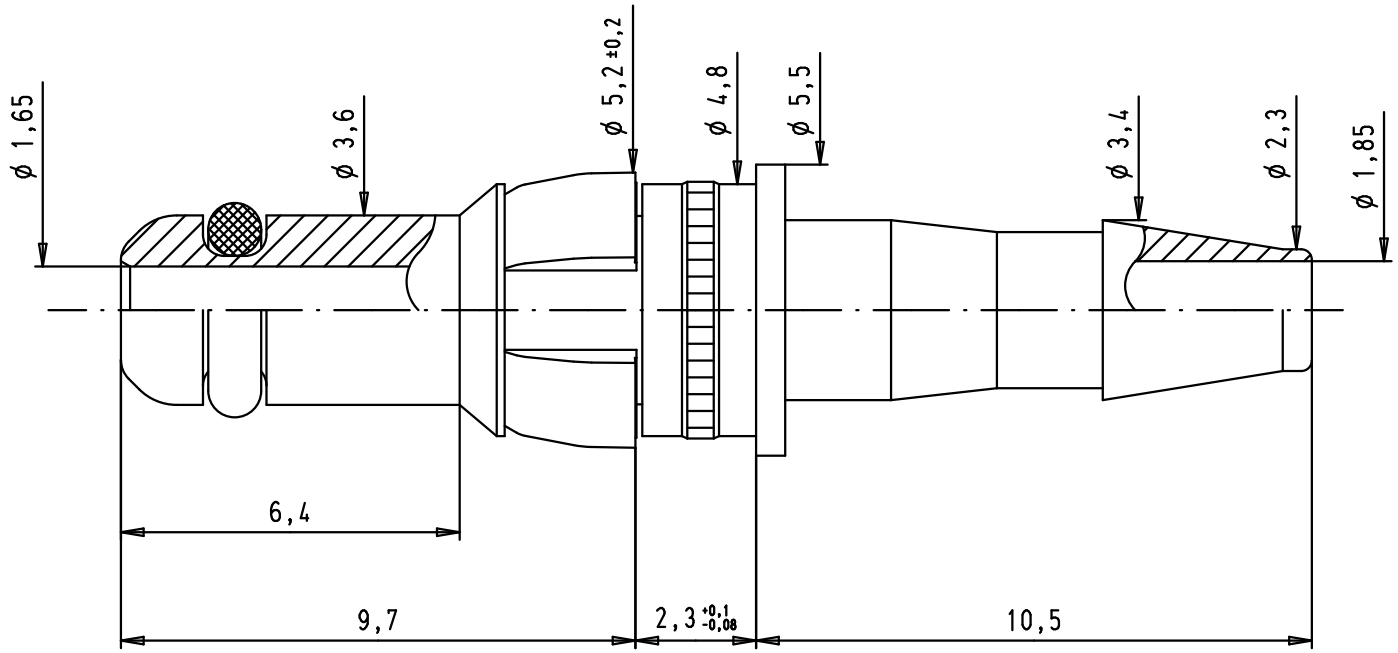

				Dat.	Name			Maßstab/ *Scale*
			Detail.	25/04/07	PK	All Dim. in mm Orig. Size DIN A 4	Straight male pneumatic contact for 3 mm inner diameter compressed air tube	7:1
			Insp.					
			Stand.					
33985	25/04/07	PK	HARTING EURL F-95972 Paris				TB 09 69 287 0062	Blatt/ *Page* 1/1
Mod.	Dat.	Name					Sub.	