VI-201-DP,VI-201-2

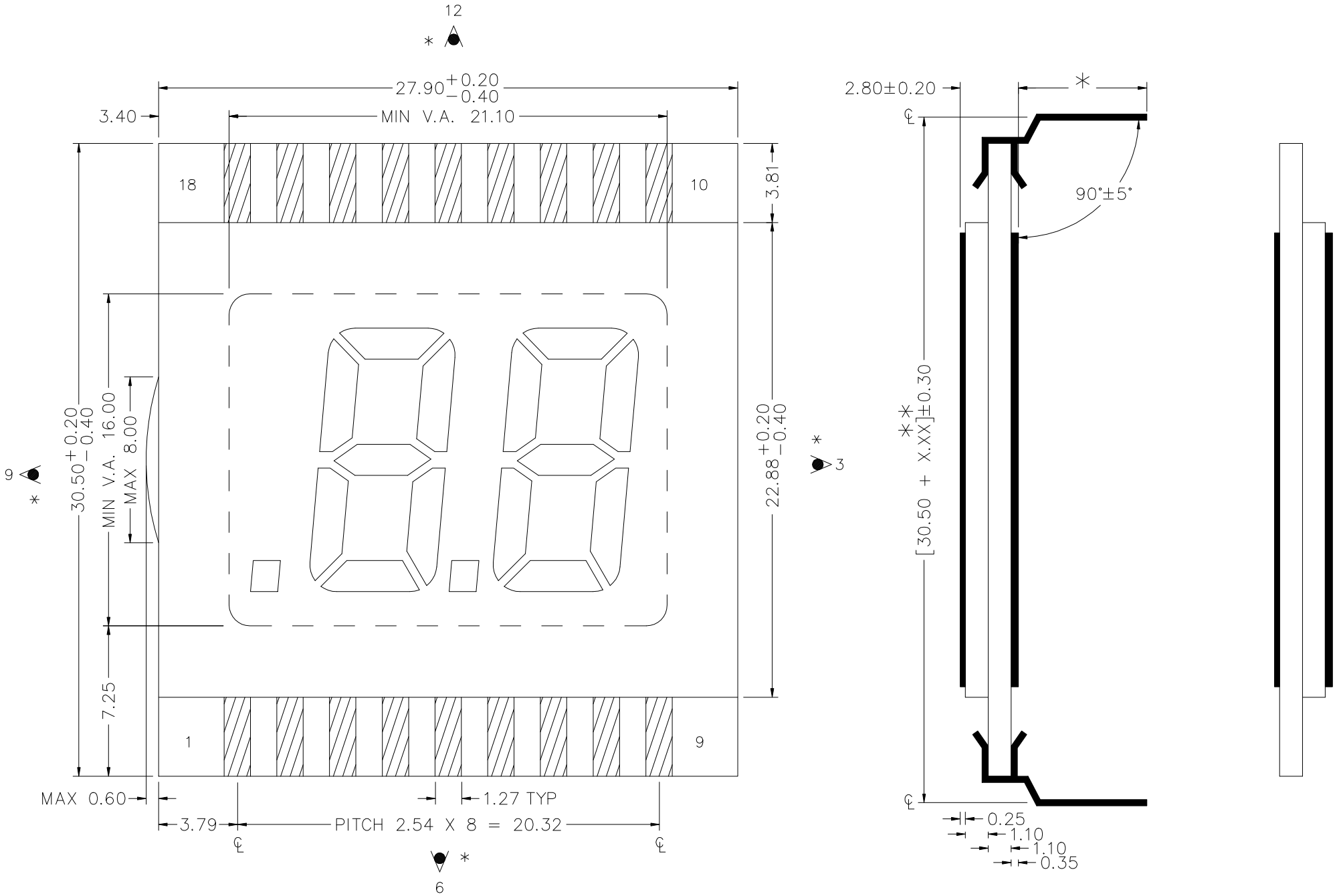

DRIVER : OKI MSM58292, HD61603

−DP

−2