DESCRIPTION: VERTICAL MOUNT MALE LOW PROFILE/PLASTIC BACK

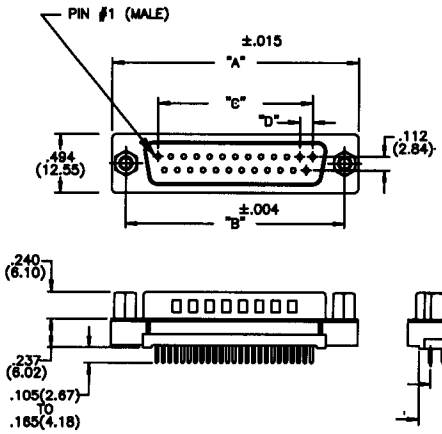

MATERIALS:

INSULATOR: THERMOPLASTIC POLYESTER, UL94V-0
CHEMICAL RESISTANCE, COLOR BLACK

SHELL: STEEL, NICKEL OR TIN PLATED

CONTACT: MALE=BRASS; FEMALE=PHOSPHOR BRONZE
GOLD FLASH OR 30 MICRO-INCH IN MATING AREA
TIN-LEAD PLATING ON TAIL ENDS

ELECTRICAL:

CURRENT RATING: 5 AMPERES
DIELECTRIC WITHSTANDING VOLTAGE: 1000VAC rms AT SEA LEVEL
INSULATION RESISTANCE: 5000 MEGOHMS MIN.
CONTACT RESISTANCE: 10 MILLIOHMS MAX.
WORKING TEMPERATURE: -55° TO +125° C

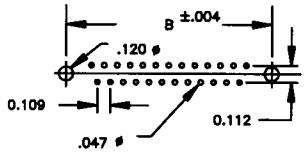

(9, 15, 25, 37 POSITIONS)

191-025-113-XXX

SERIES
NUMBER OF CONTACTS
GENDER
1 = MALE
2 = FEMALE (NO GROUND INDENTS)
TERMINATION
1 = SOLDER TAIL
2 = PRESS FIT
SHELL
2 = TIN SHELL
3 = NICKEL SHELL
HARDWARE OPTIONS:
00 = .125 HOLE
55 = 4-40 INSERT
56 = 4-40 INSERT WITH BOARD LOCKS
57 = 4-40 STANDOFF WITH BOARD LOCKS
59 = 4-40 STANDOFF
PLATING
1 = GOLD FLASH
2 = 30 MICRO-INCH GOLD

NUMBER OF CONTACTS	"A" Inch (mm)	"B" Inch (mm)	"C" Inch (mm)	"D" Inch (mm)
9	1.214(30.84)	.984 (24.99)	.432 (10.97)	.109 (2.76)
15	1.545(39.24)	1.312(33.32)	.756 (19.20)	.109 (2.76)
25	2.088(53.04)	1.852(47.04)	1.304 (33.12)	.109 (2.76)
37	2.730(69.34)	2.500(63.50)	1.956 (49.68)	.109 (2.76)

THESE DRAWINGS AND SPECIFICATIONS ARE THE PROPERTY OF NorComp AND SHALL NOT BE REPRODUCED, COPIED OR USED AS THE BASIS FOR THE MANUFACTURE OF SALE OF APPARATUS WITHOUT WRITTEN PERMISSION.

NorComp

DRAWN: PAM JENKINS	DATE: 8-22-01	
CHECKED:	DATE:	
SCALE:	SHEET 1 OF 1	REV 3
DWG NO. 191-XXX-113-XXX		