Copyright FCI.

FCIconnect.com

PRODUCT NUMBER	PITCH
VXxx12x100J0G	3.50 mm

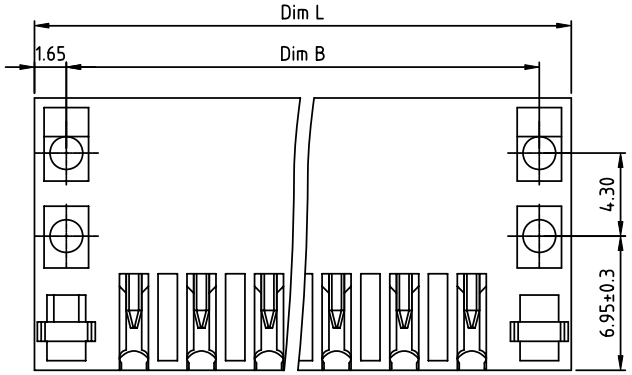

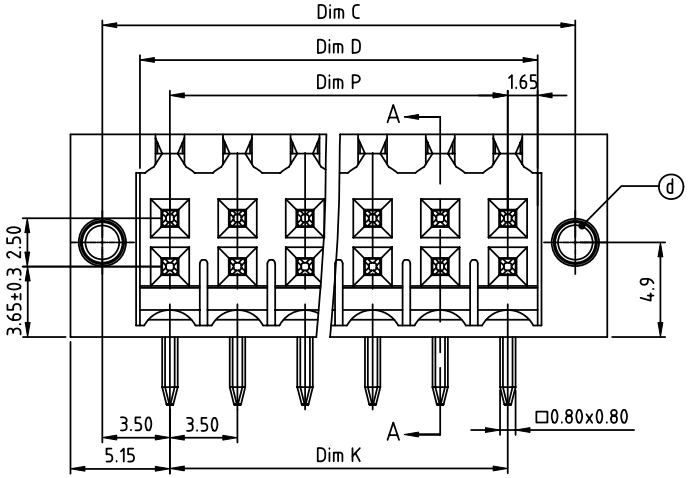

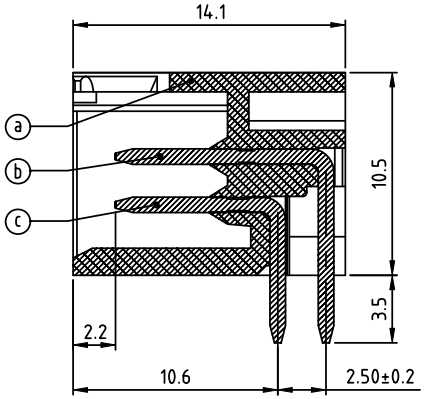

SECTION A-A

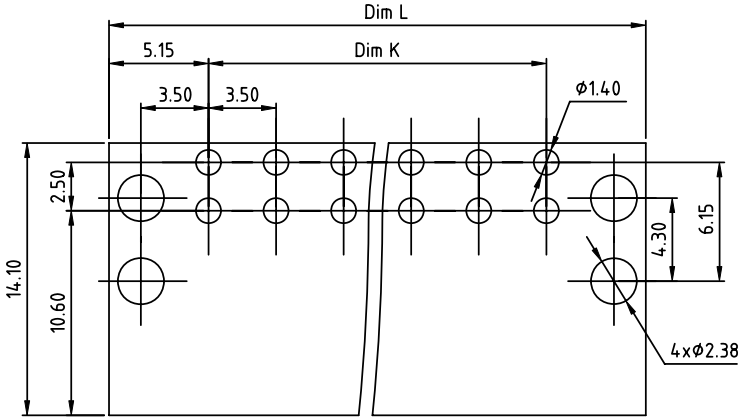

RECOMMENDED P.C.B LAYOUT
TOP VIEW

Material:
- Item ⓐTerminal housing: Thermoplastic (UL94V-0)
- Item ⓑLong pin: Brass, Tin plated
- Item ⓒShort pin: Brass, Tin plated
- Item ⓓWith flange nut: Brass ,Nickel plated. M2.0

Electrical: cULus
- Voltage rating: 150V
- Current rating: 7 A
- Withstanding Voltage: 1.3KV
- Operating temperature: -40°C to +115°C
- Soldering temperature: 260°C±5°C/5 Sec
- Safety Approval:

Dim L=(N/2-1)×3.5+10.3
Dim P=(N/2-1)×3.5
Dim K=(N/2-1)×3.5
Dim B=(N/2-1)×3.5+7.0
Dim C=(N/2-1)×3.5+7.0
Dim D=(N/2-1)×3.5+3.3

N=Number of poles

Poles	Dim L	Dim P	Dim K	Dim B	Dim C	Dim D
2x2p-2x6p	±0.15	±0.10	±0.10	±0.15	±0.15	±0.15
2x7p-2x12p	±0.25	±0.20	±0.20	±0.25	±0.25	±0.25
2x13p-2x18p	±0.35	±0.30	±0.30	±0.35	±0.35	±0.35
2x19p-2x24p	±0.40	±0.35	±0.35	±0.40	±0.40	±0.40

PART NO.: VX xx 12 x 1 00J0 G

Solid block
No. of poles
04 2x2 poles
06 2x3 poles
... ...
48 2x24 poles

Color
0 Black (RAL9005)
2 Red (RAL3001/D)
3 Orange(RAL2011/P)
4 Yellow(RAL1018/A)
5 Green(RAL6018/T)
6 Blue (RAL5015/A)
8 Grey(RAL7035/D)
9 White(RAL1102)
C Green(RAL6018/U)

RoHS compliant
(lead<4%)
In copper Alloy

mat'l. code				surface ASME Y14.5	tolerance ASME Y14.5	projection
ltr	ecn no	dr	date	tolerances unless otherwise specified		
				angles	linear X.±0.5 / X.X±0.3 / X.XX±0.1	MM
				X°±1°		scale
				dr	EVIN ZHONG 050714	
				engr	EVIN ZHONG 050714	
				chr	HANKE FENG 050714	
				appd	SHI JUN 050714	
sheet index	revision	A				
	sheet	1				

product family: TERMINAL BLOCK

title: TERMINAL BLOCK
PLUGGABLE SOCKET,RIGHT ANGLE,WITH FLANGE

dwg no: VXxx12x100J0G — sheet 1 of 1 — size A4

type: CUSTOMER Drawing