## TOP VIEW

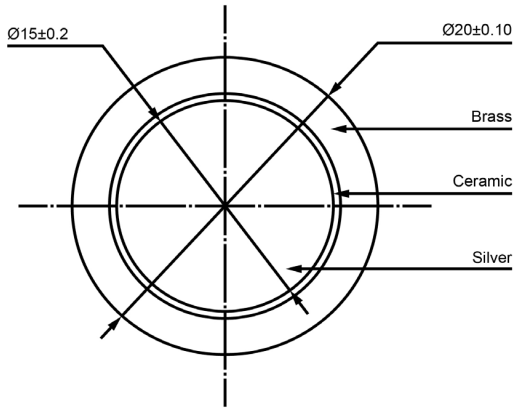


## SIDE VIEW

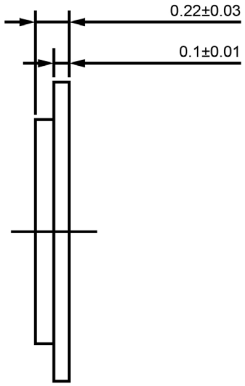


### Specifications

| Description | Value | Unit |
|---|---|---|
| Resonant Frequency | 3,600 | (Hz) |
| Resonant Impedance (Max) | 600 | (Ohm) |
| Max Input Voltage | 30 | (V) |
| Capacitance | 27,000 | (pF) |
| Plate Material | Brass | |
| Operating Temperature | -20 ~ +60 | °C |
| Storage Temperature | -20 ~ +70 | °C |
| | | |
| | | |
| | | |
| | | |
| | | |

### Notes

1) All dimensions are in mm unless otherwise noted
2) All parts meet RoHS

DB UNLIMITED

### Revision History

| Version | Description | Date | Approved |
|---|---|---|---|
| 1 | Released from Engineering | 10/21/2013 | J.S |
| | | | |
| | | | |
| | | | |
| | | | |
| | | | |
| | | | |
| | | | |

| Drawn by | Date | Checked by | Date | Approved by | Date |
|---|---|---|---|---|---|
| A.B. | 10/21/2013 | C.E. | 10/21/2013 | J.S | 10/21/2013 |

**Piezo Bender**

**P20036-2**

Additional considerations can be found at www.dbunlimitedco.com/technical-articles.


©2013, DB Unlimited