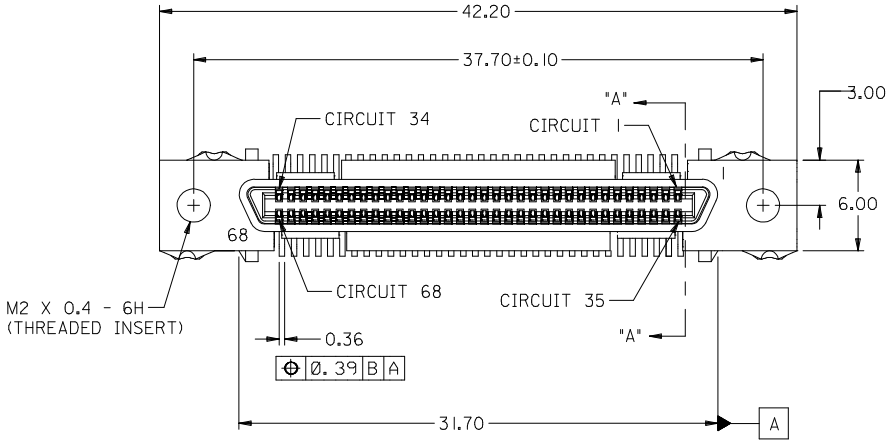

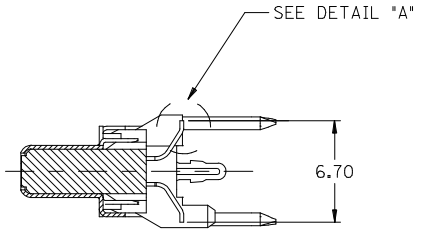

SECTION "A-A"

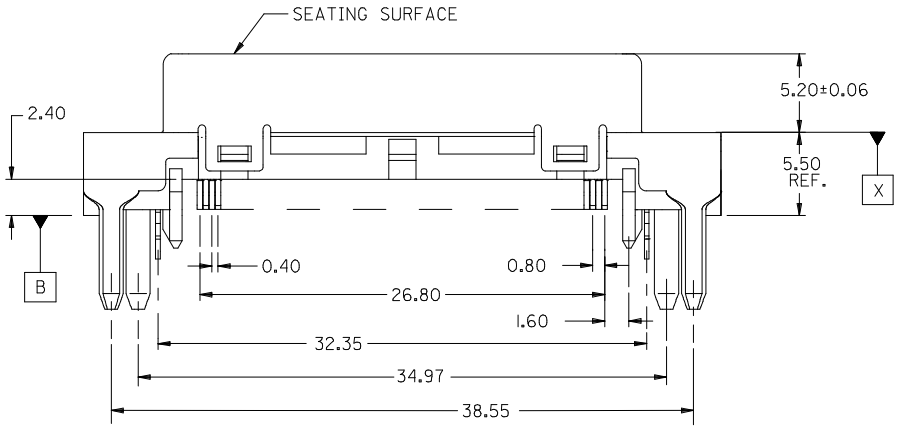

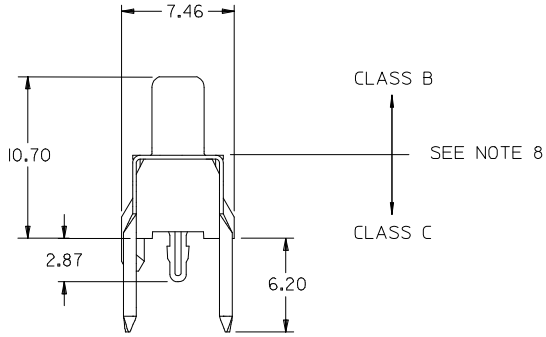

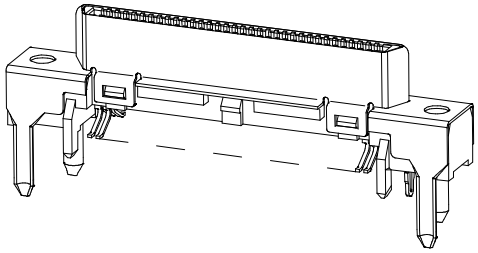

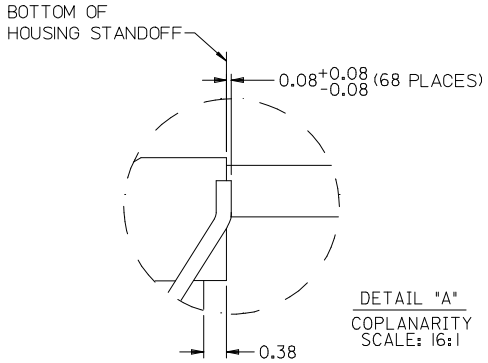

NOTES:

1. MATERIALS:
   HOUSING: HIGH TEMP THERMOPLASTIC, COLOR: BLACK, UL 94V-0.
   TERMINAL: PHOSPHOR BRONZE
   SHIELD: STEEL
   THREADED INSERT: BRASS
   SCREWLOCK: STEEL
2. FINISH:
   TERMINAL: 0.05-0.25 MICROMETER GOLD FLASH IN OVER 0.75 MICROMETER MINIMUM PALLADIUM NICKEL IN CONTACT AREA; 1.87 MICROMETER MINIMUM TIN IN TAIL AREA; ALL OVER 1.25 MICROMETER MINIMUM NICKEL.
   SHIELD: 3.81 MICROMETERS MINIMUM BRIGHT TIN OVER 1.27 MICROMETERS MINIMUM NICKEL OVER COPPER FLASH (OPTIONAL).
   THREADED INSERT: NICKEL
   SCREWLOCK: NICKEL
3. APPLICABLE PRODUCT SPEC: PS-71425-9999.
4. PACKAGING: TUBE PACK PER PK-70873-0824.
5. APPLICABLE STANDARDS: EIA-3652.
6. MATING ASSEMBLY: 71425-0001 PLUG.
7. DATE CODE: YEAR AND WEEK PER EIA -476-A.
8. PRODUCT COMPLIES WITH COSMETIC SPECIFICATION PS-45499-002. SEE FIGURE ABOVE FOR SURFACE CLASSIFICATIONS.

CLOSE OFF ENDS	EC NO: UCP2010-0048	DRWN:BBARKER 2009/09/10	CH'KD:DMORGAN 2009/09/10
APPR:SMILLER 2009/09/10	DESCRIPTION	REV	P

QUALITY SYMBOLS: ▼=0 ▽=0

GENERAL TOLERANCES (UNLESS SPECIFIED)	mm	INCH
4 PLACES	± ---	± ---
3 PLACES	± ---	± ---
2 PLACES	± 0.25	± ---
1 PLACE	± ---	± ---
ANGULAR ±1/2°		

DRAFT WHERE APPLICABLE MUST REMAIN WITHIN DIMENSIONS

DIMENSION STYLE	SCALE	DESIGN UNITS	
MM ONLY		INCH	THIRD ANGLE PROJECTION

DRAWN BY	DATE	TITLE
DBOWEN	1997/04/11	SALES ASSY VHDCI 0.8MM PITCH 68 CKT VERTICAL SMT RECEPTACLE
CHECKED BY	DATE	
SSAMPSON	1997/04/11	
APPROVED BY	DATE	MOLEX INCORPORATED
DBOWEN	1997/04/11	
MATERIAL NO.		DOCUMENT NO.
SEE TABLE		SD-73776-002

SHEET NO. 1 OF 2

SIZE C

THIS DRAWING CONTAINS INFORMATION THAT IS PROPRIETARY TO MOLEX INCORPORATED AND SHOULD NOT BE USED WITHOUT WRITTEN PERMISSION

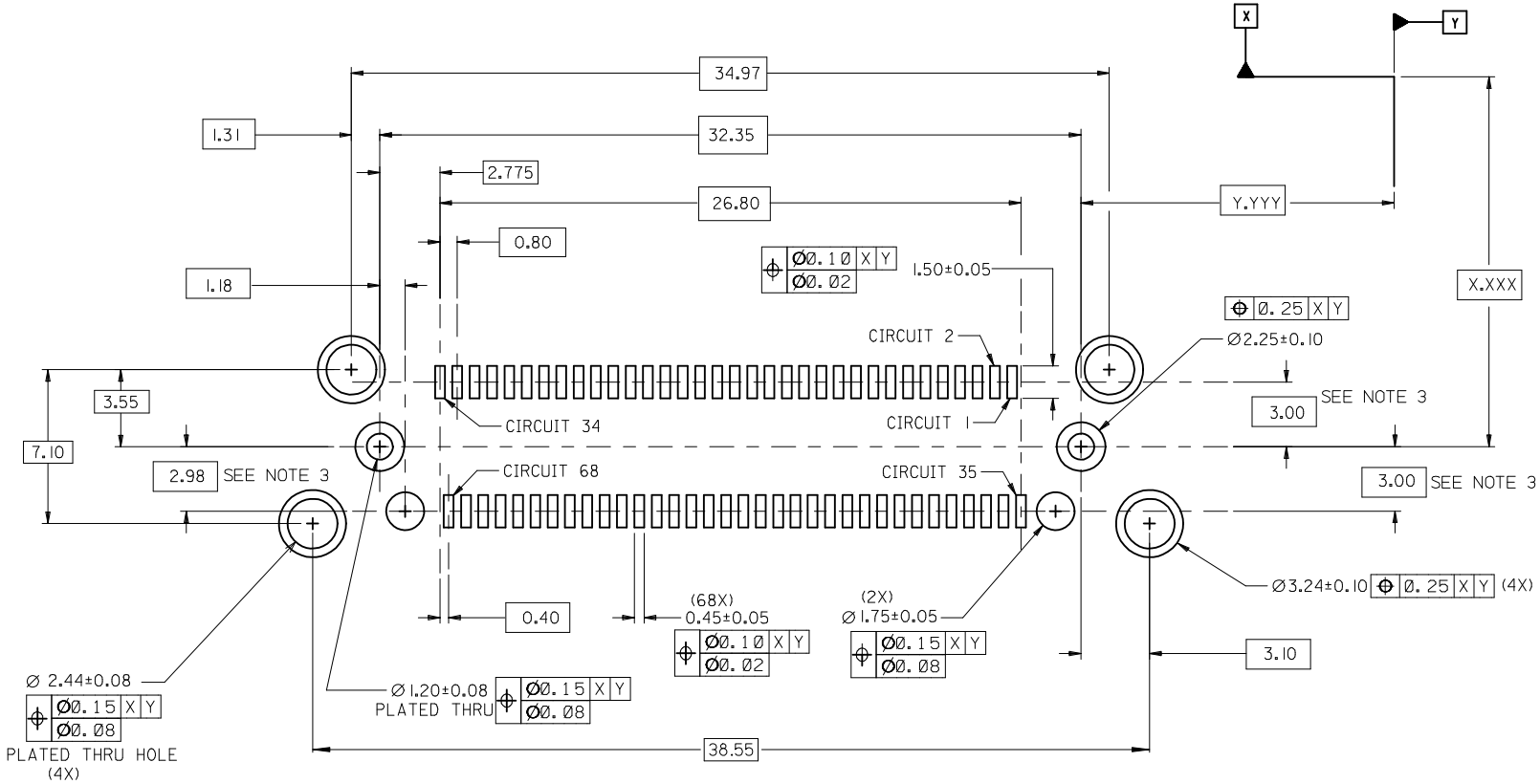

PCB LAYOUT (COMPONENT SIDE)

NOTES:

1. FOR FULL MATE WITH PLUG, PANEL THICKNESS SHOULD NOT EXCEED 1.00MM

   FUNCTIONAL MATING WITH MOLEX PLUG CAN STILL BE MAINTAINED WITH PANELS AS THICK AS 2.5mm (BUT PLUG AND RECEPTACLE WILL NOT BE FULLY MATED).

2. GUIDELINES FOR CHOOSING A MOLEX SCREWLOCK:

PANEL THICKNESS	RECOMMENDED SCREWLOCK
LESS THAN OR EQUAL TO 1.00 MM	71433-0002
1.01 TO 2.15 MM	71433-0010

3. DIMENSION 2.98 IS FROM THE CENTER OF THE .120 DIAMETER HOLES TO THE CENTER OF THE 1.75 DIAMETER HOLES.

   DIMENSION 3.00 IS FROM THE CENTER OF THE 1.20 DIAMETER HOLES TO THE CENTER OF THE SOLDER PADS.

MATERIAL NO.	DESCRIPTION
73776-0101	WITHOUT SCREWLOCK KIT
73776-0201	WITH SCREWLOCK KIT 71433-0002 PER SD-71433-005

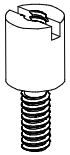

OPTIONAL SCREWLOCK P/N 71433-0002

SEE SHEET 1
EC NO: UCP2010-0048
DRWN:BBARKER 2009/09/10
CH'KD:DMORGAN 2009/09/10
APPR:SMILLER 2009/09/10
DESCRIPTION
REV

QUALITY SYMBOLS
▼=0
▽C=0

GENERAL TOLERANCES (UNLESS SPECIFIED)

	mm	INCH
4 PLACES	± ---	± ---
3 PLACES	± ---	± ---
2 PLACES	± 0.25	± ---
1 PLACE	± ---	± ---
ANGULAR ±1/2°		

DRAFT WHERE APPLICABLE MUST REMAIN WITHIN DIMENSIONS

DIMENSION STYLE: MM ONLY
SCALE: 1:1
DESIGN UNITS: INCH
THIRD ANGLE PROJECTION

DRAWN BY: DBOWEN DATE: 1997/04/11
CHECKED BY: SSAMPSON DATE: 1997/04/11
APPROVED BY: DBOWEN DATE: 1997/04/11
MATERIAL NO.: SEE TABLE
SIZE: C

TITLE: SALES ASSY VHDCI 0.8MM PITCH 68 CKT VERTICAL SMT RECEPTACLE

molex MOLEX INCORPORATED

DOCUMENT NO.: SD-73776-002
SHEET NO.: 2 OF 2

THIS DRAWING CONTAINS INFORMATION THAT IS PROPRIETARY TO MOLEX INCORPORATED AND SHOULD NOT BE USED WITHOUT WRITTEN PERMISSION

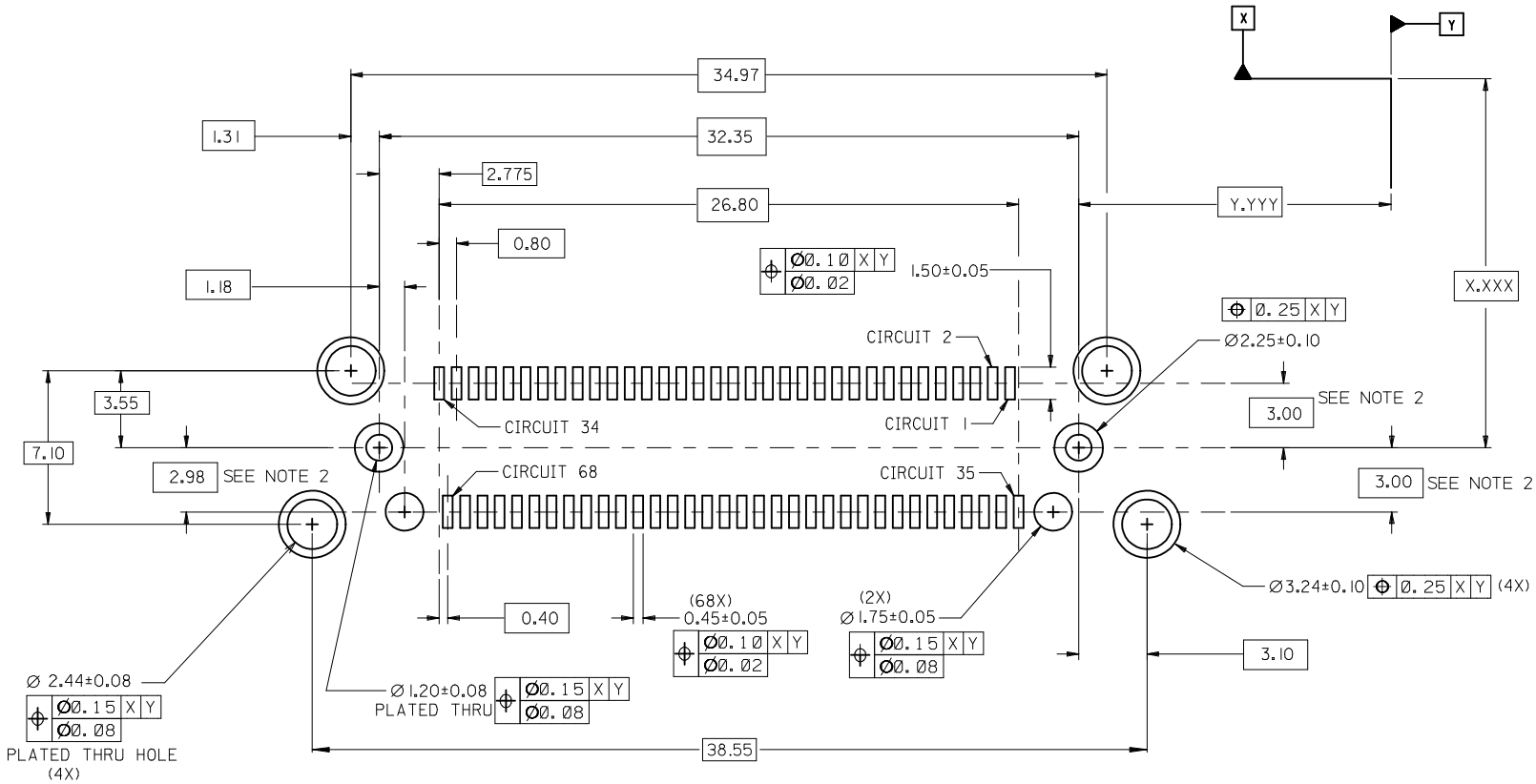

PCB LAYOUT (COMPONENT SIDE)

NOTES:

1. FOR FULL MATE WITH PLUG, PANEL THICKNESS SHOULD NOT EXCEED 1.00MM

   FUNCTIONAL MATING WITH MOLEX PLUG CAN STILL BE MAINTAINED WITH PANELS AS THICK AS 2.5mm (BUT PLUG AND RECEPTACLE WILL NOT BE FULLY MATED).

2. DIMENSION 2.98 IS FROM THE CENTER OF THE .120 DIAMETER HOLES TO THE CENTER OF THE 1.75 DIAMETER HOLES.

   DIMENSION 3.00 IS FROM THE CENTER OF THE 1.20 DIAMETER HOLES TO THE CENTER OF THE SOLDER PADS.

ADD NOTE 2	2005/12/12	DESCRIPTION	
EC NO: UCP2006-1268			
DRWN:MS1BARRA	2005/12/19		
CHKD:BBARKER	2005/12/19		
APPR:SMILLER	2005/12/22		
N		REV	

QUALITY SYMBOLS: ▼=0, (C)=0

GENERAL TOLERANCES (UNLESS SPECIFIED)

	mm	INCH
4 PLACES	± ---	± ---
3 PLACES	± ---	± ---
2 PLACES	± 0.25	± ---
1 PLACE	± ---	± ---
ANGULAR ±1/2°		

DRAFT WHERE APPLICABLE MUST REMAIN WITHIN DIMENSIONS

DIMENSION STYLE: MM ONLY	SCALE: 4:1	DESIGN UNITS: METRIC	THIRD ANGLE PROJECTION
DRAWN BY: DBOWEN	DATE: 1997/04/11	TITLE: VHDCI 0.8MM PITCH 68 CIRCUIT VERTICAL SMT RECEPT. SALES ASSEMBLY	
CHECKED BY: SSAMPSON	DATE: 1997/04/11		
APPROVED BY: DBOWEN	DATE: 1997/04/11	molex MOLEX INCORPORATED	
MATERIAL NO.: SEE TABLE		DOCUMENT NO.: SD-73776-002	SHEET NO.: 2 OF 2
SIZE: C		THIS DRAWING CONTAINS INFORMATION THAT IS PROPRIETARY TO MOLEX INCORPORATED AND SHOULD NOT BE USED WITHOUT WRITTEN PERMISSION	