MATERIAL NUMBER	# OF COLUMNS	# OF DIFF PAIR	DIM "A" MAX	DIM "B"	PTH ∅
171020-1020	10	40	19.00	17.10	0.39±0.05
171020-1036	6	24	11.50	3.80	0.39±0.05

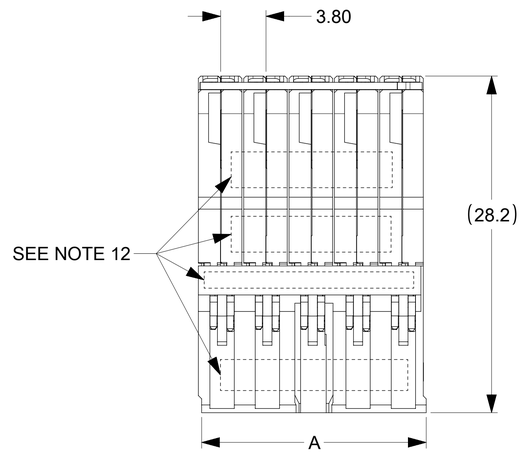

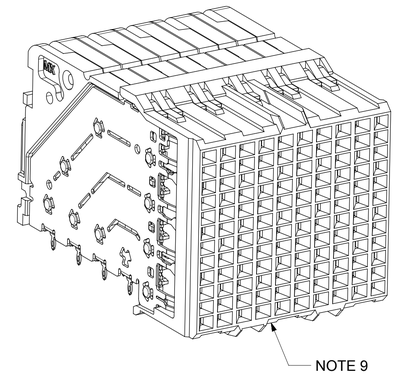

171020- * 0 * *

1 = UNGUIDED OPEN; TIN

20 = 10 COLUMN; 0.39 PTH
36 = 6 COLUMN; 0.39 PTH

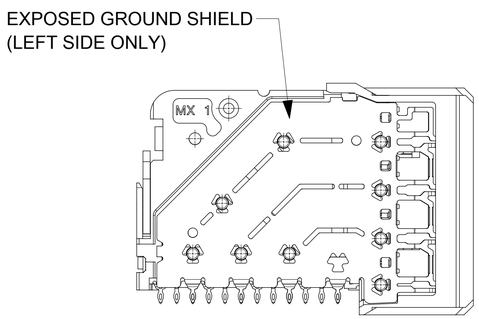

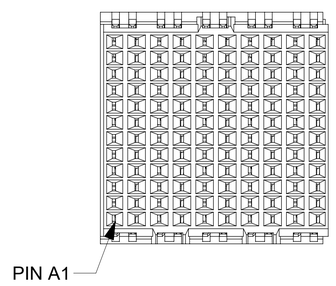

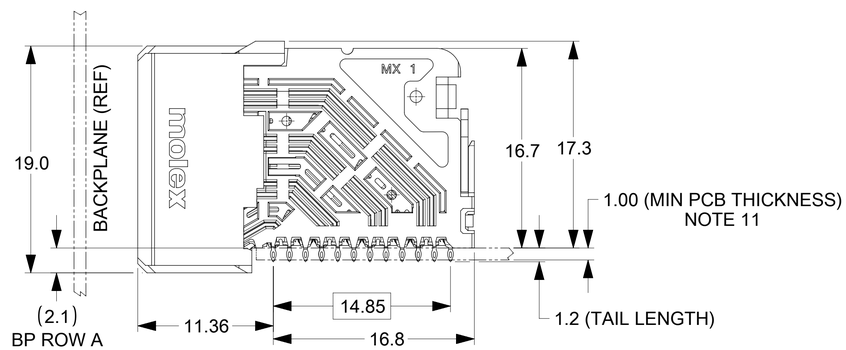

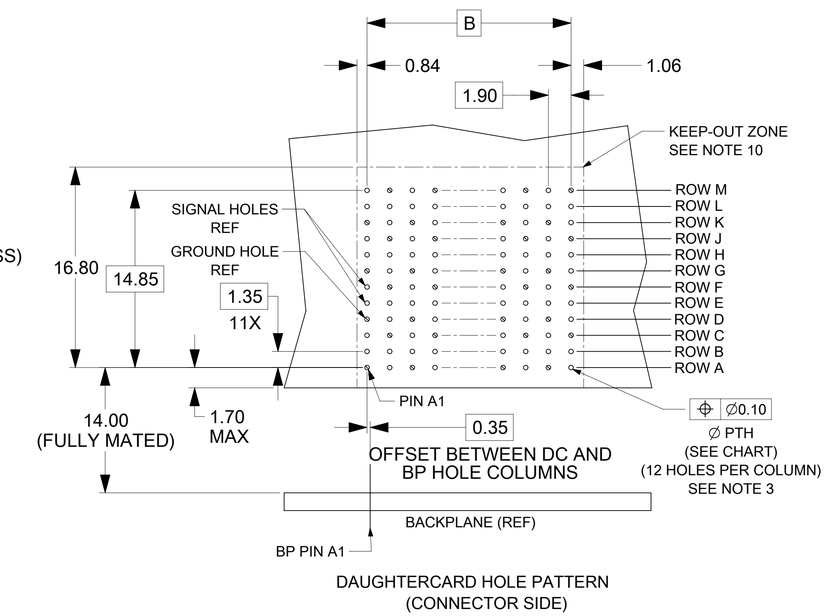

DAUGHTERCARD HOLE PATTERN
(CONNECTOR SIDE)

NOTES:
1. MATERIALS: HOUSING - LIQUID CRYSTAL POLYMER (LCP), GLASS-FILLED, UL94V-0
   TERMINALS - HIGH PERFORMANCE COPPER ALLOY
2. FINISH: 30µIN SELECTIVE GOLD IN CONTACT AREA, SELECTIVE TIN ON PCB TAILS, NICKEL OVERALL.
3. REFER TO MOLEX PRODUCT SPEC PS-171030-999 FOR PERFORMANCE SPECIFICATIONS AND ADDITIONAL PCB INFORMATION.
4. EACH WAFER COLUMN CONTAINS BOTH SIGNAL AND GROUND TERMINALS.
5. PRODUCT IS PACKAGED PER PK-70873-610.
6. THIS PART CONFORMS TO CLASS B REQUIREMENTS OF COSMETIC SPEC PS-45499-002.
7. REFER TO MOLEX SALES DRAWING SD-76155-001 FOR THE MATING HEADERS.
8. REFER TO MOLEX PCB ROUTING GUIDE AS-76060-990 FOR ANTIPAD AND ROUTING RECOMMENDATIONS.
9. PART NUMBER 171020-1020 SHOWN ON DRAWING. KEYING FEATURES WILL CHANGE WITH COLUMN SIZE.
10. THE KEEP-OUT ZONE INDICATES THE AREA WHICH MUST BE CLEAR OF ALL OTHER COMPONENTS TO ACCOMODATE CONNECTOR INSERTION & REPAIR NEEDS. IF A CONNECTOR IS TO BE STAKED, USE 1.90mm CENTER-TO-CENTER PTH PROGRESSION.
11. MINIMUM PCB THICKNESS IS 1.00mm FOR PROPER COMPLIANT PIN FUNCTION.
12. MARKING: LOCATED APPROXIMATELY AS SHOWN. PART NUMBER AND DATE CODE.
13. THIS STACKABLE MODULE IS FOOTPRINT, INTERFACE AND ENVELOPE SIZE COMPATIBLE WITH 76160 SERIES DAUGHTERCARD CONNECTORS AND MATES TO THE SAME HEADERS.

DOCUMENT STATUS	P1	RELEASE DATE	2020/03/20 02:07:54

THIS DRAWING CONTAINS INFORMATION THAT IS PROPRIETARY TO MOLEX ELECTRONIC TECHNOLOGIES, LLC AND SHOULD NOT BE USED WITHOUT WRITTEN PERMISSION

DIMENSION UNITS	SCALE
mm	NTS

GENERAL TOLERANCES (UNLESS SPECIFIED)

ANGULAR TOL	±	0.5 °
4 PLACES	±	
3 PLACES	±	
2 PLACES	±	0.13
1 PLACE	±	0.25
0 PLACES	±	

DRAFT WHERE APPLICABLE MUST REMAIN WITHIN DIMENSIONS

CURRENT REV DESC: MIGRATED TO NX

EC NO: 634179
DRWN: DSHETTY01 2019/05/08
CHK'D: AAPPARAOTHAK 2020/03/19
APPR: CWANG25 2020/03/20

INITIAL REVISION:
DRWN: KHUGHES 2015/09/11
APPR: TELO 2015/09/15

THIRD ANGLE PROJECTION | DRAWING: D-SIZE | SERIES: 171020

molex

IMPACT XTR DAUGHTERCARD
4 PAIR TTV SIGNAL MODULE UNGUIDED SALES DRAWING

PRODUCT CUSTOMER DRAWING

DOCUMENT NUMBER	DOC TYPE	DOC PART	REVISION
SD-171020-0001	PSD	001	A2

MATERIAL NUMBER	CUSTOMER	SHEET NUMBER
SEE CHART	GENERAL MARKET	1 OF 1