FCIconnect.com

PRODUCT NUMBER	PITCH
VIxx21x500J0G	5.08 mm

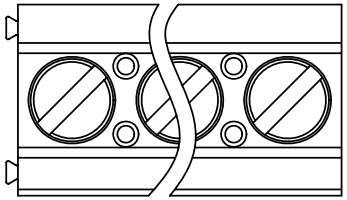

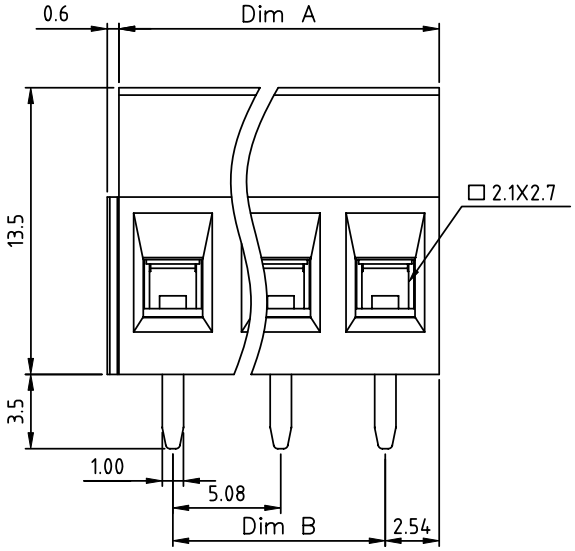

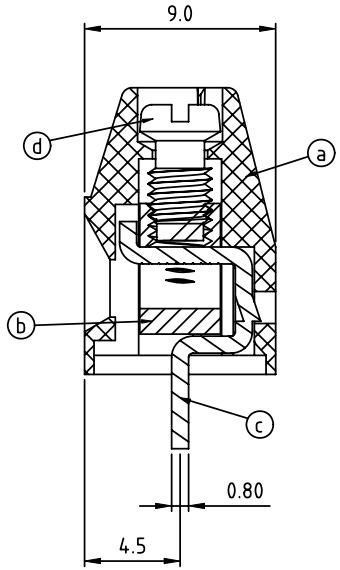

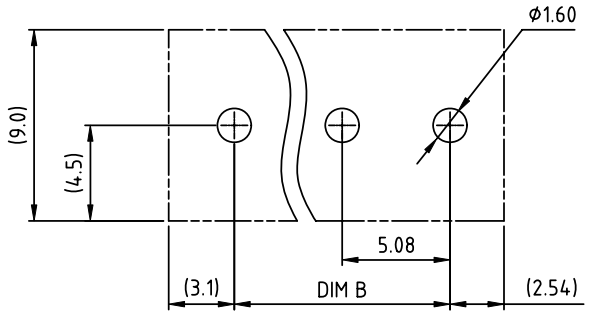

RECOMMENDED P.C.B LAYOUT
TOP VIEW

Material:
- Item a Terminal housing: Thermoplastic (UL 94V-0)
- Item b Clamp: Brass ,Ni plated
- Item c Solder pin: Brass ,Tin plated
- Item d Terminal screw: Steel Zinc plating"-"slot type

Electrical cULus
- Voltage rating: 300VAC
- Current rating: 16A
- Wire range:
- Solid wire(AWG): 12-28
- Stranded wire(AWG): 12-28
- Torque: 3.5Lb-In
- Screw: M3
- Wire strip length: 6-7mm
- Withstanding Voltage: 1.6KV
- Operating temperature: -40°C to +115°C
- Soldering temperature: 260°C±5°C/5 Sec
- Safety Approval: c UL us

DIMENSION

Dim A	N×5.08
Dim B	(N-1)×5.08

N=number of poles

Poles	Tolerance
4p-5p	±0.10
6p-10p	±0.15
11p-15p	±0.20
16p-20p	±0.25
21p-24p	±0.30

PART NO.: VI xx 2 1 x 5 00J0 G

Solid block
No. of poles
04 4 poles
05 5 poles
... ...
24 24 poles

Color
0 Black (RAL9005)
2 Red (RAL3001/D)
3 Orange(RAL2011/P)
4 Yellow(RAL1018/A)
5 Green(RAL6018/T)
6 Blue (RAL5015/A)
8 Grey(RAL7035/D)
9 White(RAL1102)
C Green(RAL6018/U)

RoHS compliant
(lead<4%)
In copper Alloy

mat'l. code				surface ASME Y14.5	tolerance ASME Y14.5	projection	product family TERMINAL BLOCK
ltr	ecn no	dr	date	tolerances unless otherwise specified			title
				angles / linear	X.±0.5	MM	TERMINAL BLOCK
					X.X±0.3		
				X°±1°	X.XX±0.1	scale	RISING CLAMP,180D WIRE INLET,SOLID BLOCK
				dr	EVIN ZHONG 040914		dwg no VIxx21x500J0G sheet 1 of 1 size A4
				engr	EVIN ZHONG 040914		
				chr	HANKE FENG 040914		
				appd	SHI JUN 040914		type CUSTOMER Drawing
sheet index	revision	A					
	sheet	1					