REVISIONS			
LTR	DESCRIPTION	DATE	APPROVED

NOTES: UNLESS OTHERWISE SPECIFIED

1. CONSTRUCTION:
   HOUSING: MOLDED NYLON. AVAILABLE IN TEN COLORS.
   FRAME: BRASS. NICKEL PLATED.
   CONTACT: BeCu OR PHOSPHOR BRONZE. NICKEL PLATED.

2. PERFORMANCE:
   MAXIMUM CURRENT: 15 AMPS
   MAXIMUM VOLTAGE: 3500 VRMS
   MAXIMUM TEMPERATURE: 200°F (93°C)

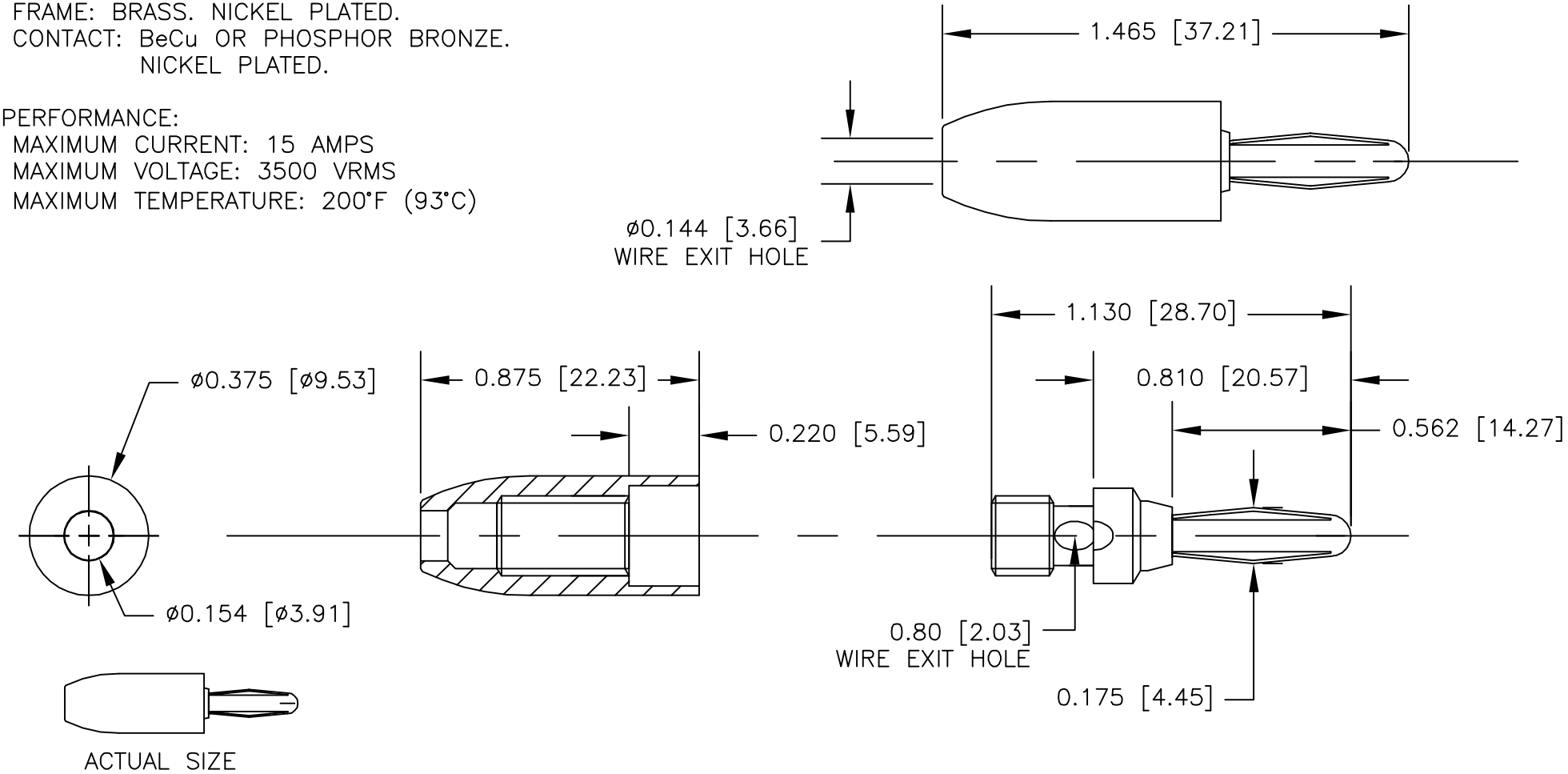

		UNLESS OTHERWISE SPECIFIED DIMENSIONS ARE IN INCHES TOLERANCES ARE: FRACTIONS ± DECIMALS .XX ± .XXX ± ANGLES ±	CONTRACT NO.	E-Z-HOOK® DIVISION OF TEKTEST INC. ARCADIA, CA 91006 U.S.A.
			APPROVALS / DATE	
			DRAWN R.L. 9/10	DESCRIPTION STD BANANA PLUG
		MATERIAL SEE NOTE.	APPROVED BY	
		FINISH SEE NOTE.		SIZE A / CODE IDENT NO. 08505 / DRAWING NO. 9202 / REV.
NEXT ASSY	USED ON			
APPLICATION		DO NOT SCALE DRAWING		SCALE 2:1 / SHEET 1 OF 1

THE INFORMATION CONTAINED IN THIS DOCUMENT IS PROPRIETARY TO E-Z-HOOK. THE INFORMATION IS NOT TO BE REPRODUCED WITHOUT PRIOR WRITTEN PERMISSION OF E-Z-HOOK, DIV. OF TEKTEST INC.
MAXIMUM TESTED RATINGS IN A HANDS-FREE CONTROLLED ENVIRONMENT. MAXIMUM RATINGS ARE NOT TO BE USED CONCURRENTLY.