Alle Rechte vorbehalten/ *All rights reserved*

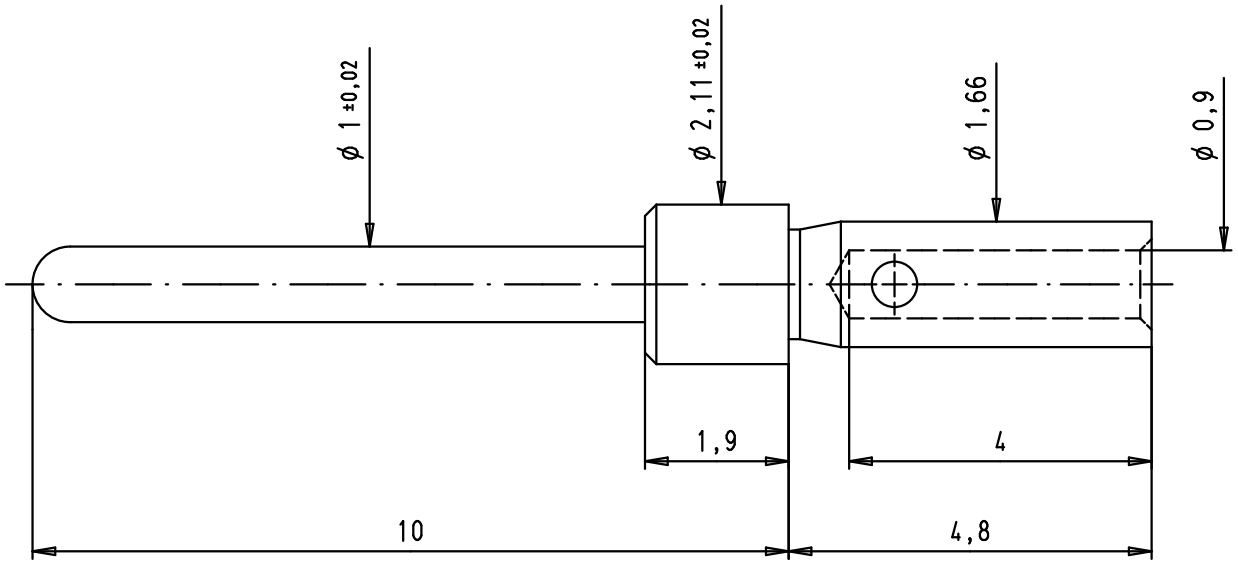

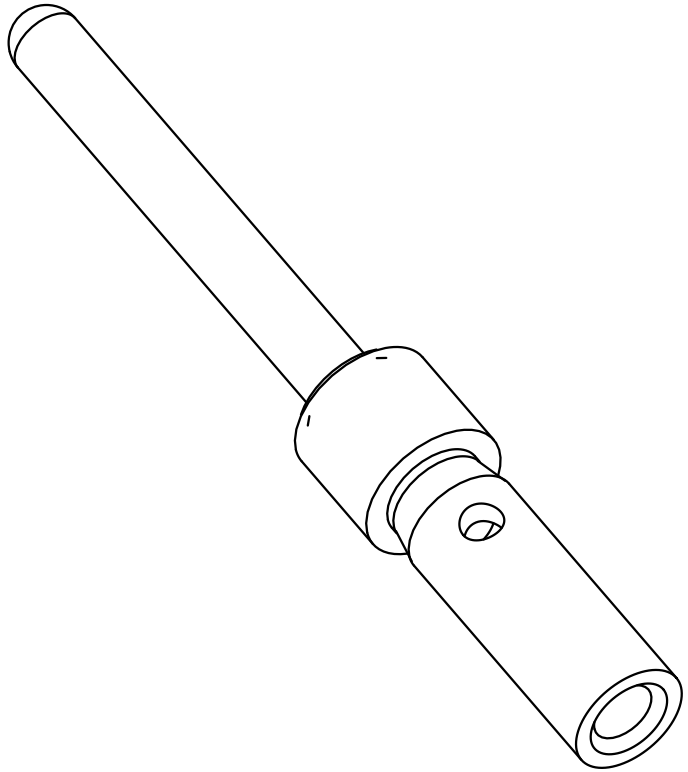

				Dat.	Name	All Dim. in mm Orig. Size DIN A4	Inducom Male straight turned signal contact with crimp termination for AWG 22 wires
			Detail.	07/04/04	HAGE		
			Insp.				
			Stand.				
35638	23/01/09	PK	HARTING EURL F-95972 Paris				TB 61 03 000 0094
31986	07/04/04	HAGE					
Mod.	Dat.	Name					Sub.

Maßstab/ *Scale*: 10:1

Blatt/ *Page*: 1/1

61 03 000 0094	PL1
Part number	Performance level