SC440A

High Efficiency Integrated Driver for 6-Strings of 30mA LEDs

POWER MANAGEMENT

Features

- Wide input range 4.5V to 27V
- 42V maximum output voltage with adjustable OVP for smaller output capacitor
- **Drives up to 72 WLEDs in 6 strings**
- Programmable WLED current for up to 30mA per string
- **1% string-to-string current matching**
- **2A integrated power switch**
- **Up to 91% efficiency**
- 0.2% to 100% PWM dimming
- Analog dimming
- 800KHz switching frequency for small external component
- **Open/short LED protection**
- **Short LED protection disable**
- <1uA shut-down current
- Thermal protection
- 4mm x 4mm x1mm MLPQ-24 package (Pb-free, Halogen free, WEEE & RoHS compliant)

Applications

- Medium-sized LCD panel
- Notebook Display
- White LED Power Supplies
- Sub-Notebook and Tablet Computer Displays
- Portable Media Players
- LCD Monitors
- Digital Video Cameras

Description

The SC440A is a high-efficiency multiple string WLED driver with an integrated boost converter. It operates over a wide input range from 4.5V to 27V with a maximum output voltage of 42V and a 2A internal power switch.

It can drive up to 42V output voltage in 6 strings with current up to 30mA per string. The string-to-string current matching is 1% typical, 3% maximum and the overall efficiency is greater than 90% due to the low current sense voltage and a low-impedance internal power switch. The wide PWM dimming range boasts a ratio of 500: 1.

The 800kHz switching frequency enables the user to optimize the external component sizes for high efficiency. When there are fewer LEDs in each string, users can use a lower output voltage protection level which yields an allowable reduction in associated costs, size and voltage ratings of the output capacitor.

The SC440A also features a comprehensive open and short circuit LED protection functions. It disables the corresponding strings with LED open or LED short conditions while keeping other strings under normal operation. This feature allows LCD panels to remain viewable even under LED failure, wire disconnect, or short-circuit conditions. The short LED protection function can be disabled. The internal thermal shutdown protects the IC from overheating at abnormal conditions. The SC440A is available in a common 4mm x 4mm x1mm MLPQ-24 package.
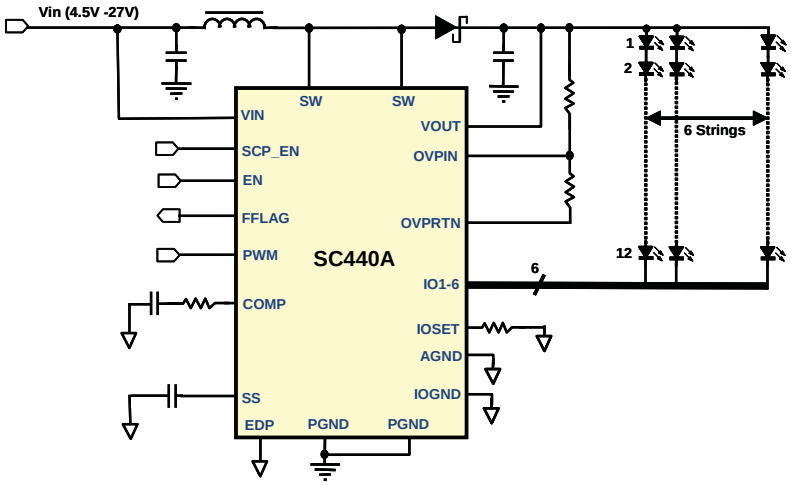
Typical Application Circuit