Materials
1. Insulator, PBT + 15% glass fiber, white
2. Shell, C2700 brass, 2 µm nickel plated
3. Spring contact, C5191 phosphor bronze, 2 µm nickel plated

Electrical requirements
Dielectric strength: 1 min @ 500 Vac
Insulation resistance: 100 MΩ @ 500 Vdc
Contact resistance: 30 mΩ or less
Rated voltage: 20 Vdc
Rated current: 6 A

Mechanical requirements
Insertion force: 0.5-3 kgf
Withdrawal force: 0.4-2 kgf
Durability: 5000 mating cycles while maintaining; 0.3-2 kgf insertion force, 0.2-1.5 kgf withdrawal force and a less than 100 mΩ contact resistance.

Environmental requirements
Damp test: 40 °C, RH 90-100% for 96 hrs. Cool to ambient and recover for 2 hours. Maintain dielectric strength of 500 Vac for 1 min, insulation resistance of 50 MΩ @ 500 Vdc minimum and a contact resistance of 100 mΩ or less.

Dry test: 70 °C, RH 70-85% for 96 hrs. Cool to ambient and recover for 2 hours. Maintain insulation resistance of 50 MΩ @ 500 Vdc minimum and a contact resistance of 100 mΩ or less.

Salt spray test: 35 °C, RH 90-95%, 5% NaCl mist for 24 hrs. Wash parts after test. Maintain mechanical requirements and a contact resistance of less than 80 mΩ.

Operating range
-25 to 70 °C, relative humidity of 85% or less

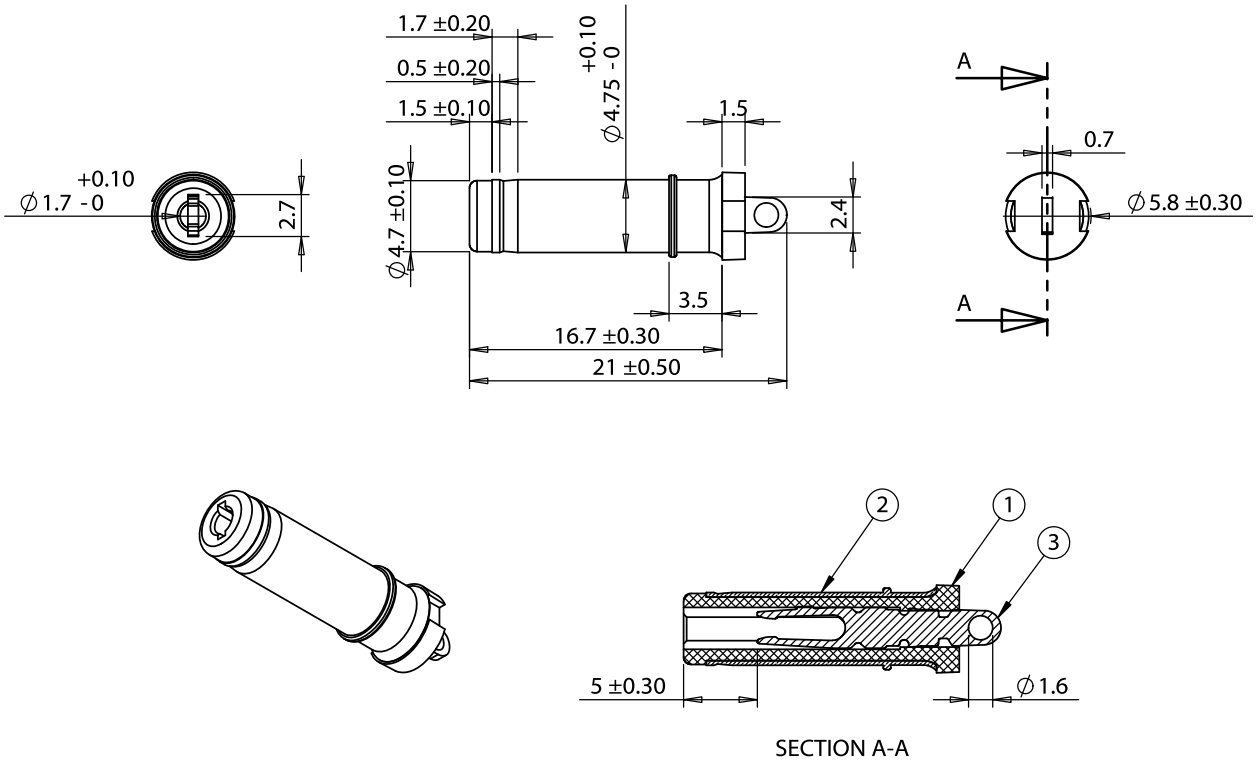

Revision:	Date:	Description:
A	11/7/2012	Initial release

Prepared: GL 2016.03.31 11:20:26 -07'00'

Verified: LA Digitally signed by LA. DN: c=US, st=Nevada, o=Engineering, email=LA@tensility.com, cn=LA Date: 2016.03.31 16:47:52 -07'00'

Dimensions are in millimeters.
Tolerances:
X: ± 0.5 mm
X.X: ± 0.3 mm
X.XX: ± 0.05 mm

Notes:

RoHS compliant

Function test: no open, no short circuit, no intermittent

Description:

Connector, dc plug, 4.75x1.7xL21mm, brass, nickel plated, molding type, white insulators

TENSILITY

tel 1.541.323.3228 *800* 877.670.7118
fax 1.541.323.4202 *web* tensility.com

Size: A

Part number: 50-00316

Scale: 2:1

Sheet 1 of 1

5 4 3 2 1