THIS DOCUMENT IS THE PROPERTY OF KEYSTONE ELECTRONICS CORP. AND SHALL NOT BE REPRODUCED, DISTRIBUTED OR USED AS A BASIS FOR MANUFACTURE WITHOUT PRIOR WRITTEN PERMISSION FROM KEYSTONE ELECTRONICS CORP.

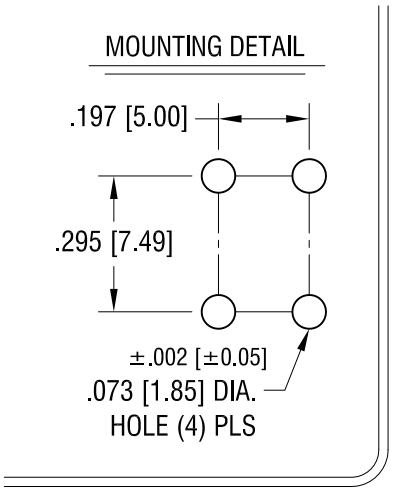

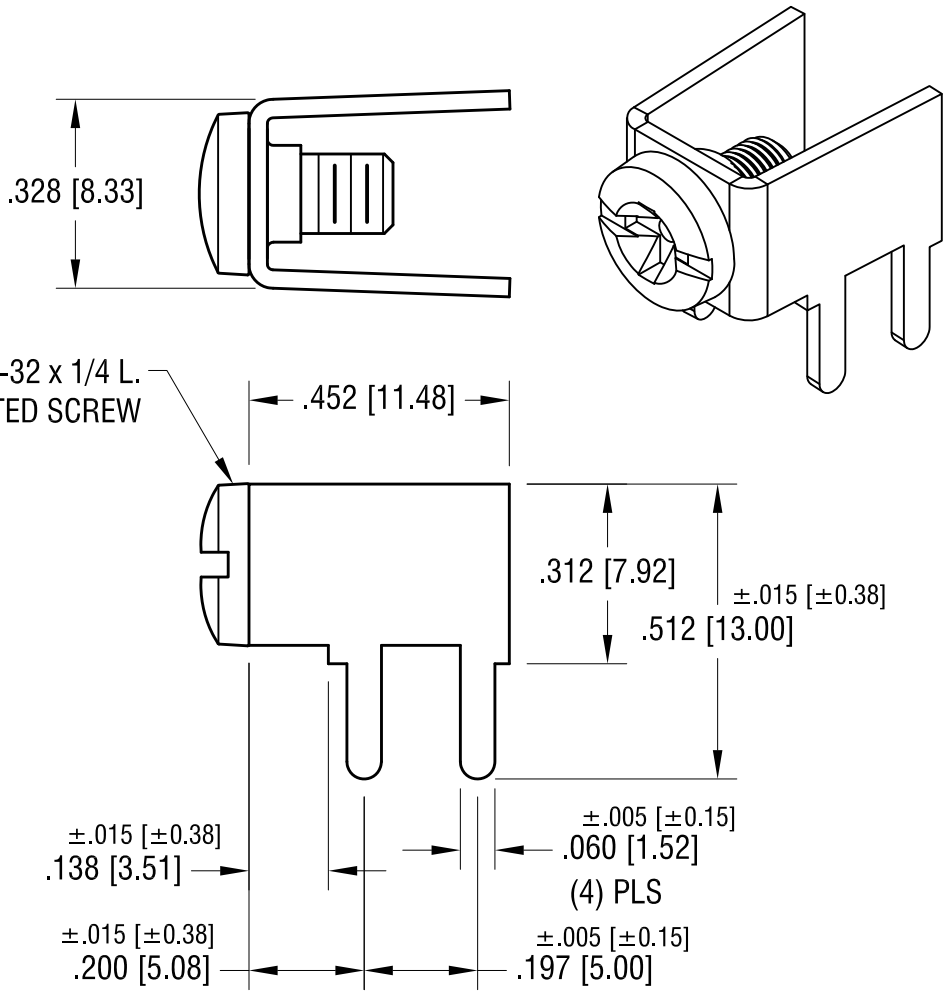

PC SCREW TERMINAL WITH COLORED SCREW HEAD

PART NO.	HEAD COLOR	PART NO.	HEAD COLOR
7700-2	RED	7700-5	BLUE
7700-3	BLACK	7700-6	GREEN
7700-4	WHITE	7700-7	YELLOW

NOTES:

1. TERMINAL:
   MAT'L - .032 [0.81] TH'K BRASS, MATTE TIN PLATE
   SCREW:
   MAT'L - BRASS, NICKEL PLATE

DATE	DESCRIPTION	REV.
7.08.09	CHANGE AS PER ECN 09–096	B
1.7.08	CHANGE AS PER ECN 08–033	A

KEYSTONE ELECTRONICS CORP.

www.keyelco.com • ASTORIA, N.Y. 11105-2017 • Tel (718) 956-8900

PART NAME: PC SCREW TERM. W/ COLORED SCREW HEAD

MATERIAL: AS NOTED

FINISH: AS NOTED

DRN BY: BOONE | DATE: 10.1.03

APP'D: LN | SCALE: 3X

TOLERANCES INCH [MM]
DECIMAL ± .010 [± 0.25]
ANGULAR ± 1°
UNLESS OTHERWISE SPECIFIED

CODE: C

DWG NO. 7700-2 - 7700-7