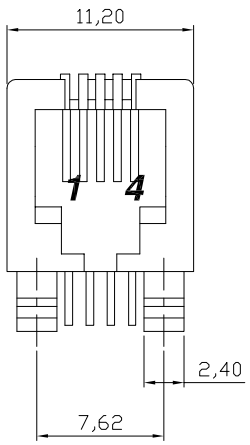

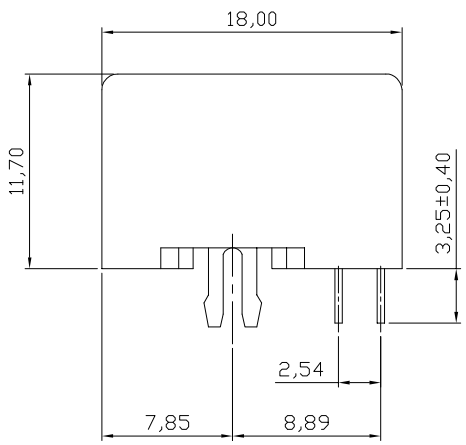

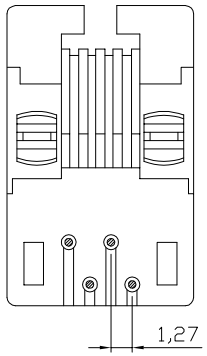

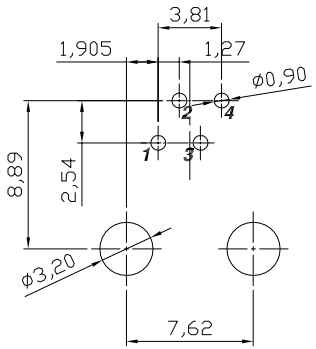

PCB Layout
(Top View)

Specification:

1. Electrical Char
   - Insulation Resistance: 500MΩ min. 500V DC for 1 minute
   - Contact Resistance: 30mΩ max.
   - Rating Current: 1.5A max.
   - Rating Voltage: 150V AC
   - Dielectric Voltage: 1000 Vrms at 1MA 60 sec. min.

2. Physical Char
   - Housing: PBT Glass filled (UL 94V-0) Color: Black
   - Soldering Temperature: 235°C for 5 sec.
   - Spring Wire: 0.45mm Dia Phosphor Bronze
     6u" Gold plating over Nickel
   - Temperature Range: -40°C to +85°C
   - Durability: 750 mating cycles min.

3. Packing: Tray

RoHS compliant
Unit:mm

Scale	Free
TOLERANCE	
.XX	±0.20
.XXX	±0.13
.XXXX	±0.05
DIM	TOL
Angle	+0°30'

Id.	Modification	Date	Name
0	Drawn	28.10.2015	Amy

	Date	Name
Drawn	28.10.2015	Amy
Approved	28.10.2015	Amy

ASSMANN WSW components

Customer-No.

ASSMANN WSW-No.
A-2004-3-4-LP-N-R

Drawing-No.
ASS 7041 CO

rev00

Replace

SHEET