NOTES:

1. MATERIALS AND FINISHES:
   BODY, WASHER, COUPLING NUT
   & RETAINING RING - BRASS, NICKEL PLATING
   CONTACT - BeCu, GOLD PLATING
   OUTER CONTACT - BeCu, NICKEL PLATING
   INSULATOR - PTFE, NATURAL
   SPRING - STAINLESS STEEL, PASSIVATED
   GASKET - FLUOROSILICONE, BLACK

2. ELECTRICAL:
   A. IMPEDANCE: 75 OHM
   B. FREQUENCY RANGE: DC - 12 GHz
   C. RETURN LOSS: -20 dB MIN. @ DC-6 GHz
   -15 dB MIN. @ 6-12 GHz

3. MECHANICAL:
   A. DURABILITY: 500 CYCLES MIN.
   B. TEMPERATURE RANGE: -65°C TO +165°C

4. PACKAGING:
   A. QUANTITY: SINGLE PACK
   B. MARKING: BAG TO BE MARKED
   "AMPHENOL RF, 31-70540-12G AND DATE CODE
   U.S. PATENT NO. 7,553,177"

THIRD ANGLE PROJ.

REVISIONS				
REV	DESCRIPTION	DATE	ECN	APPR
A	RELEASE TO MFG.	28-Jul-18	08667	BMG

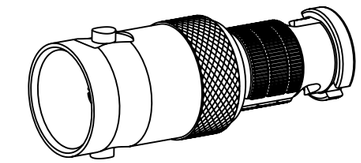

SCALE 2.000

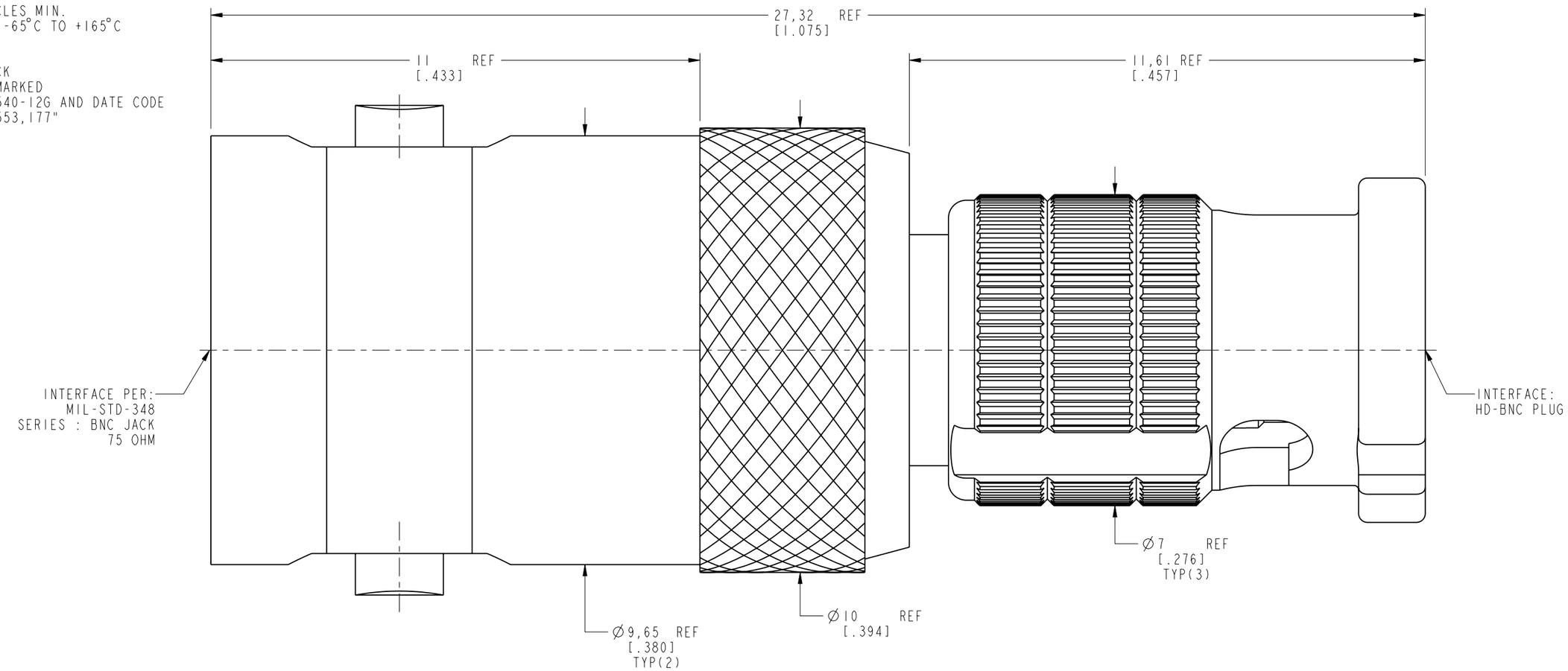

PROTECTED UNDER U.S. PATENT # 7,553,177

CUSTOMER OUTLINE DRAWING

ALL OTHER SHEETS ARE FOR INTERNAL USE ONLY

UNLESS OTHERWISE SPECIFIED, DIMENSIONS ARE IN METRIC AND TOLERANCES ARE:

<0.5mm	0.5 - 6mm	6 - 30mm	30 - 120mm	ANGLES
± 0.05mm	±0.1mm	±0.2mm	± 0.3mm	±1°

NOTICE - These drawings, specifications, or other data (1) are, and remain the property of Amphenol corp. (2) must be returned upon request; and (3) are confidential and not to be disclosed to any person other than those to whom they are given by Amphenol Corp. the furnishing of these drawings, specifications, or other data by Amphenol Corp., or to any other person to anyone for any purpose is not to be regarded by implication or otherwise in any manner licensing, granting rights to permitting such holder or any other person to manufacture, use or sell any product, process or design, patented or otherwise, that may in any way be related to or disclosed by said drawings, specifications, or other data.

MATERIAL
-

REFERENCE
EAR# 7824
REF: APH-BNCJ-HDBNCP

CONFIGURATION LEVEL: In Work

FINISH

		DATE
DRAWN	STAR	30-Jul-18
ENGINEER	SUNDE	01-Aug-18
APPROVED	S.HSIEH	01-Aug-18
CAD FILE		

TITLE
75 OHM BNC STR JACK TO HD-BNC PLUG ADAPTER

SCALE: 10.0:1.0 | SHEET 2 OF 2

DWG SIZE: B | REV: A

Amphenol RF
www.amphenolrf.com

DRAWING NO. 31-70540-12G
ITEM NO. 31-70540-12G
PART NO. 31-70540-12G