Data/Voice Coupling
Miniature Encapsulated Transformer

MET-31-T

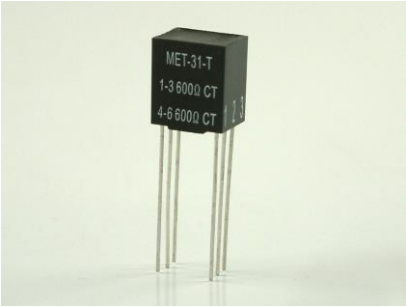

Description:

Triad's high reliability audio transformers provide the durability and precision required in today's demanding designs. These transformers are available for a wide variety of applications.

Electrical Specifications (@20C)

Power level (mW)	Matching Impedance		Max. Ma DC Unbalance in Primary	DC Resistance (Ω)		Overall Turns Ratio
	Primary	Secondary		Primary	Secondary	
50	600Ω CT	600Ω CT	3.0	70	95	1.0:1.0

Operating Temperature: -20C° to 85C°

Storage Temperature: -55C° to 105C°

Frequency Response: ± 3.0 dB, at 300 Hz to 100K Hz (1 KHz Ref.)

Longitudinal Balance: 60dB Min @ 1 KHz

***Max power at 300Hz**

Pri-Sec Hipot test (Pri-Sec): 1000 VRMS for 1 sec.

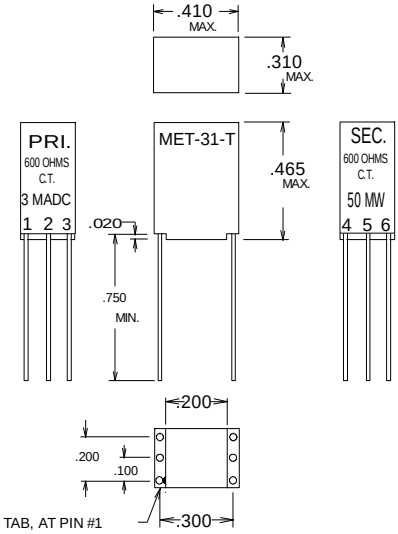

Construction:

Plug-in terminals are precision spaced to provide fixed mounting centers.
Epoxy molded case includes a .020" recess for ease of solder inspection.
Leads are Tin plated 0.020" in diameter.

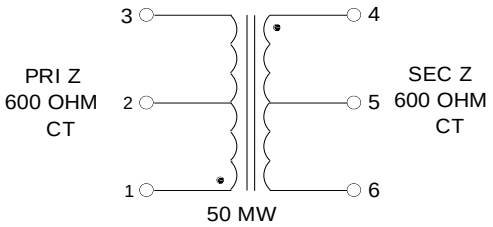

RoHS Compliance: As of manufacturing date February 2016, all standard products meet the requirements of 2015/863/EU, known as the RoHS 3 initiative.

*Upon printing, this document is considered "uncontrolled". Please contact Triad Magnetics website for the most current version. For soldering and washing information please see http://www.triadmagnetics.com/faq.html

Web: www.TriadMagnetics.com
Phone 951-277-0757
Fax 951-277-2757

460 Harley Knox Blvd.
Perris, California 92571

Publish Date: May 30, 2019