# ALC70F561DD350

Aliases (A546EF561M350F)

ALC70, Aluminum Electrolytic, 560 uF, 20%, 350 VDC, -40/+85°C

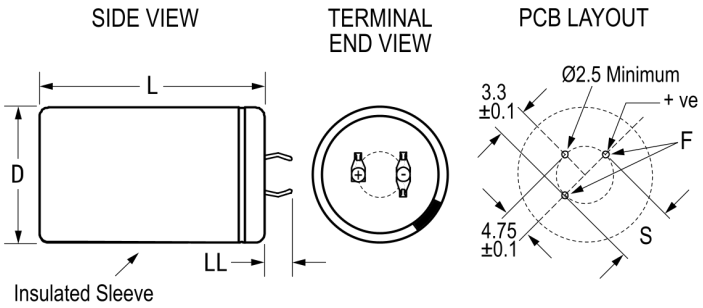


Click here for the 3D model.

| Dimensions | |
|---|---|
| D | 35mm +1mm |
| L | 40mm +/-2mm |
| S | 10mm +/-0.1mm |
| LL | 4mm +/-1mm |
| F | 2mm +/-0.1mm |

| Packaging Specifications | |
|---|---|
| Sleeving | Yes |
| Packaging | Bulk, Bag |

| General Information | |
|---|---|
| Series | ALC70 |
| Dielectric | Aluminum Electrolytic |
| Description | Snap-In, Aluminum Electrolytic |
| RoHS | Yes |
| Lead | 3 Pin Short |
| AEC-Q200 | No |
| Halogen Free | Yes |
| Component Weight | 65 g |
| Notes | Dimensions D And L Include Sleeving. |
| Shelf Life | 156 Weeks |

| Specifications | |
|---|---|
| Capacitance | 560 uF |
| Capacitance Tolerance | 20% |
| Voltage DC | 350 VDC, 385 VDC (Surge) |
| Temperature Range | -40/+85°C |
| Rated Temperature | 85°C |
| Life | 15000 Hrs (Rated Voltage And Ripple Current At 85C), 24000 Hrs (Rated Voltage at 85C) |
| Resistance | 253.1 mOhms (100Hz 20C), 132.9 mOhms (10kHz 20C) |
| Ripple Current | 2.534 Amps (100Hz 85C), 5.932 Amps (10kHz 85C) |
| Leakage Current | 1176 uA (5min 20°C) |

Statements of suitability for certain applications are based on our knowledge of typical operating conditions for such applications, but are not intended to constitute - and we specifically disclaim - any warranty concerning suitability for a specific customer application or use. This Information is intended for use only by customers who have the requisite experience and capability to determine the correct products for their application. Any technical advice inferred from this Information or otherwise provided by us with reference to the use of our products is given gratis, and we assume no obligation or liability for the advice given or results obtained.



© 2006 - 2023 KEMET