REFERENCE SPECIFICATIONS

-NFC 93425 (in compliance with HE 501)

PHYSICAL CHARACTERISTICS

-INSULATOR MATERIAL: THERMOPLASTIC UL94V0

-CONTACT MATERIAL: BRASS, GOLD OVER NICKEL

-ACCESSORIES: STEEL FOR METAL BRACKETS, cadmium plated yellow passivation

THERMOPLASTIC UL94V0 FOR PLASTIC BRACKETS

BRASS FOR OTHERS ACCESSORIES, cadmium plated yellow passivation

-SHELLS: STEEL, cadmium plated yellow passivation

ELECTRICAL CHARACTERISTICS

-NOMINAL CURRENT: 7.5A

-CONTACT RESISTANCE: <=7.3 m Ohms

-CONTACT/CONTACT : >=1000 V

-CONTACT/GROUND : >=1200 V

-INSULATION RESISTANCE: >=5000 MOhms

ENVIRONMENTAL CHARACTERISTICS

- CLIMATIC CATEGORY: 55/125/56

TEMPERATURE RANGE -55°C TO +125°C

DAMP HEAT STEADY STATE 56 DAYS

SALT SPRAY 48 HOURS

MECHANICAL CHARACTERISTICS

RETENTION AGAINST TORQUE: -Threaded insert:0.7 N.m min

-Female screw:0.5 N.m min

DBML25P500M

Series

Shell size: **E A B C D**
(see sheet 3)

Front accessory definition
(see sheet 2)

Blank :without accessory
L :threaded insert M3
O :threaded insert UNC 4-40
V :female screw UNC 4-40

Layout of contacts (see sheet 3)
9,15,25,37,50

Contacts
P :Pin

Termination type
5 Right angle/Europe standard

Plating
00 Right angle 500 matings/unmatings
43 Right angle 500 matings/unmatings for harsh environment

PCB accessories definition(see sheet 2)
Blank :Plastic brackets
C :Without brackets
M :Metal brackets

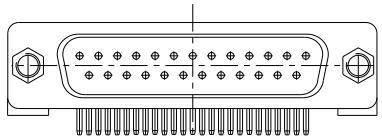

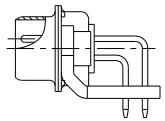

25 WAY for Example

rev	ecn no	dr	date
A	LS06-0174	MPE	2006/11/14
B	LS07-0065	MPE	2007/03/02
C	LS08-0119	MPE	2008/04/29
-	-	-	-
-	-	-	-
-	-	-	-
-	-	-	-

www.fciconnect.com

surface - ISO 1302 | tolerance std ISO 406 ISO 1101 | projection | mm

TOLERANCES UNLESS OTHERWISE SPECIFIED

Dr	M PESSON	2006/11/14	ANGULAR 0° ±2°	LINEAR 0.X ±0.3	size A2
Eng	P LEGARE	2006/11/14		0.XX ±0.1	Scale 2:1
Chr	P LEGARE	2006/11/14		0.XXX ±0.05	ECN LS08-0119
Appr	P LEGARE	2006/11/14	Product family -		Spec ref

Title: SUB MALE DM HE501 series with right angle contact

dwg no C01-8637-1740 Rev. C

catalog no -

CUSTOMER

sheet 1 of 9

REV F - 2006-04-17

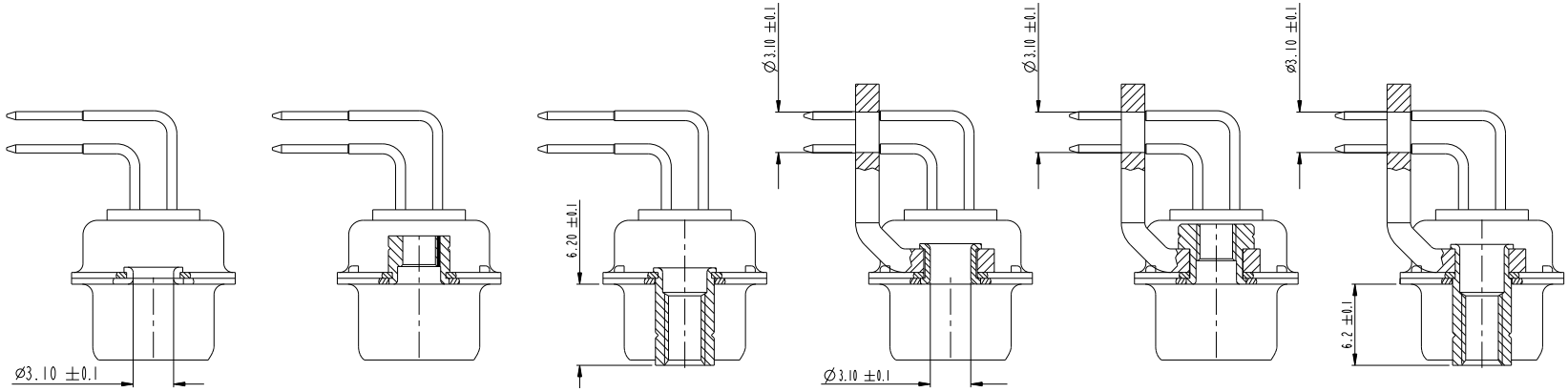

FRONT ACCESSORY	**Blank** Without	**L** insert M3 **O** insert UNC 4.40	**V** female screw UNC 4.40	**Blank** Without	**L** insert M3 **O** insert UNC 4.40	**V** female screw UNC 4.40
PCB ACCESSORIES	**C** Without	**C** Without	**C** Without	**M** Metal bracket	**M** Metal bracket	**M** Metal bracket

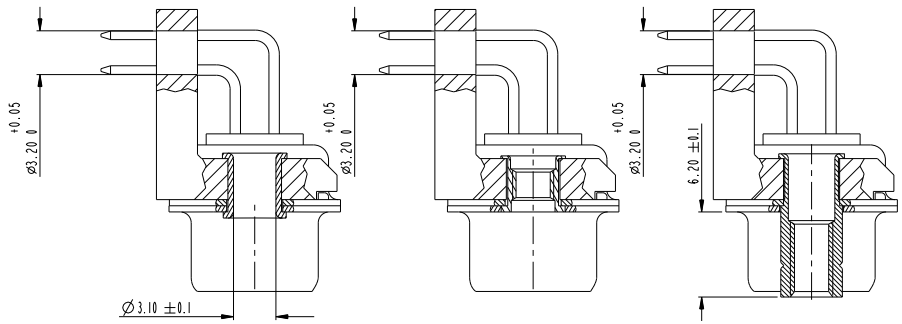

FRONT ACCESSORY	**Blank** Without	**L** insert M3 **O** insert UNC 4.40	**V** female screw UNC 4.40
PCB ACCESSORIES	**Blank** Plastic bracket	**Blank** Plastic bracket	**Blank** Plastic bracket

SCALE:4

www.fciconnect.com			surface ISO 1302	tolerance std ISO 406 ISO 1101		projection	mm
			TOLERANCES UNLESS OTHERWISE SPECIFIED				
Dr	M PESSON	2006/11/14	ANGULAR	LINEAR	0.X ±0.3	size A2	Scale 2:1
Eng	P LEGARE	2006/11/14			0.XX ±0.1		
Chr	P LEGARE	2006/11/14	0° ±2°		0.XXX ±0.05	ECN	LS08-0119
Appr	P LEGARE	2006/11/14	Product family			Spec ref	
Title	SUB MALE DM HE501 series with right angle contact					dwg no C01-8637-1740	Rev. C
catalog no						CUSTOMER	sheet 2 of 9

REV F - 2006-04-17

PART NUMBER	FRONT ACCESSORY	PCB ACCESSORY
D*MxxP500C	without	without
D*MLxxP500C	insert M3	without
D*MOxxP500C	insert UNC 4.40	without
D*MVxxP500C	female screw UNC 4.40	without
D*MxxP500M	without	Metal bracket
D*MLxxP500M	insert M3	Metal bracket
D*MOxxP500M	insert UNC 4.40	Metal bracket
D*MVxxP500M	female screw UNC 4.40	Metal bracket
D*MxxP500	without	Plastic bracket
D*MLxxP500	insert M3	Plastic bracket
D*MOxxP500	insert UNC 4.40	Plastic bracket
D*MVxxP500	female screw UNC 4.40	Plastic bracket

shell size	Contact number
*	XX
E	09
A	15
B	25
C	37
D	50

PART NUMBER	FRONT ACCESSORY	PCB ACCESSORY
D*MxxP543C	without	without
D*MLxxP543C	insert M3	without
D*MOxxP543C	insert UNC 4.40	without
D*MVxxP543C	female screw UNC 4.40	without
D*MxxP543M	without	Metal bracket
D*MLxxP543M	insert M3	Metal bracket
D*MOxxP543M	insert UNC 4.40	Metal bracket
D*MVxxP543M	female screw UNC 4.40	Metal bracket
D*MxxP543	without	Plastic bracket
D*MLxxP543	insert M3	Plastic bracket
D*MOxxP543	insert UNC 4.40	Plastic bracket
D*MVxxP543	female screw UNC 4.40	Plastic bracket

CROSS REFERENCES HE501 and FCI

HE501 P/N	FCI´P/N	FRONT ACCESSORY	PCB ACCESSORY
HE501PxxVP6	D*MxxP500	without	Plastic bracket
HE501MxxVP6	D*MxxP500M	without	Metal bravket

www.fciconnect.com

surface - ISO 1302 ✓ | tolerance std ISO 406 ISO 1101 | projection | mm

TOLERANCES UNLESS OTHERWISE SPECIFIED

Dr	M PESSON	2006/11/14	ANGULAR 0° ±2°	LINEAR	0.X	±0.3	size A2 / Scale 2:1
Eng	P LEGARE	2006/11/14			0.XX	±0.1	
Chr	P LEGARE	2006/11/14			0.XXX	±0.05	ECN LS08-0119
Appr	P LEGARE	2006/11/14	Product family -				Spec ref

Title: SUB MALE DM HE501 series with right angle contact

dwg no: C01-8637-1740 | Rev. C

catalog no -

CUSTOMER | sheet 3 of 9

REV F - 2006-04-17

DIMENSION FOR SHELL E,A,B,C WITHOUT BRACKET

Dimensions are in millimeters

Shell size	Number of contacts	A $^{+0.76}_{-0}$	B $^{+0.25}_{-0}$	C ±0.12	F $^{+0.57}_{-0}$	G $^{+0.25}_{-0}$	H $^{+0.51}_{-0}$	L $^{+0.22}_{-0}$
E	09	30.43	16.79	24.99	10.47	5.9 $^{+0.15}_{-0}$	19.02	0.80
A	15	38.76	25.12	33.32	10.47	5.9 $^{+0.15}_{-0}$	27.25	0.80
B	25	52.65	38.84	47.04	10.43	5.7 $^{+0.25}_{-0}$	41.02	0.80
C	37	68.94	55.30	63.50	10.56	5.7 $^{+0.25}_{-0}$	57.45	0.90

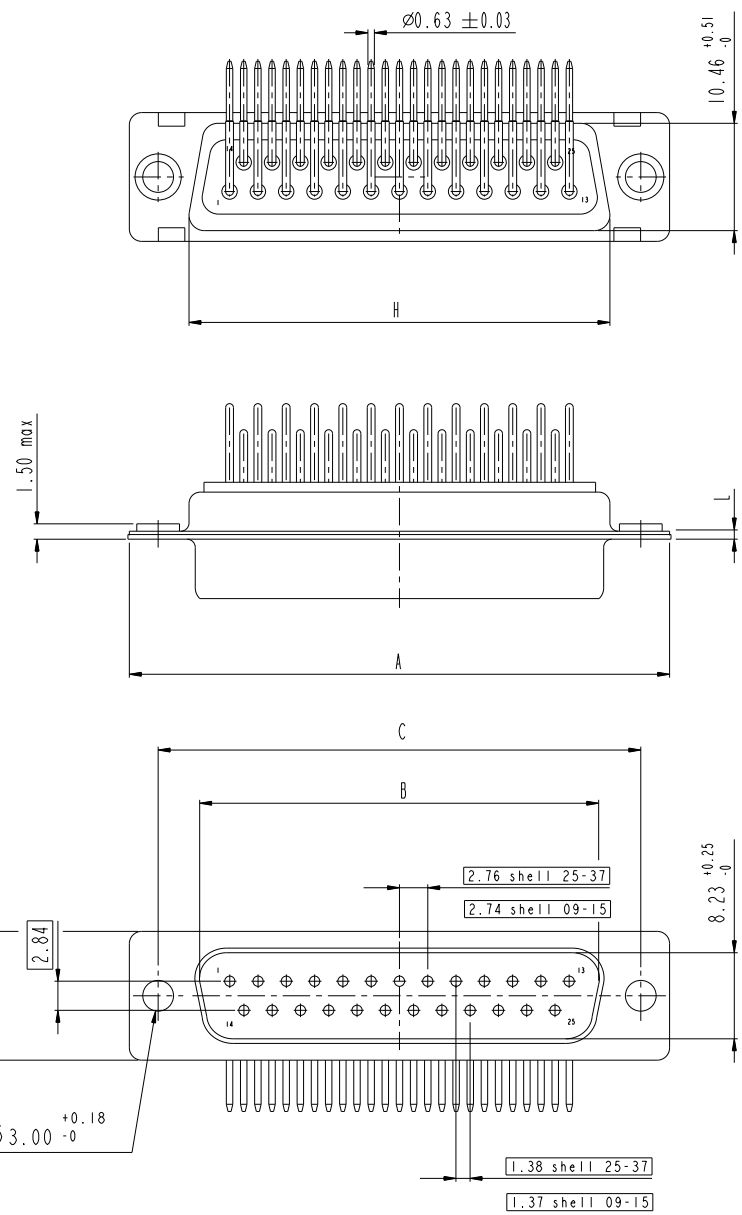

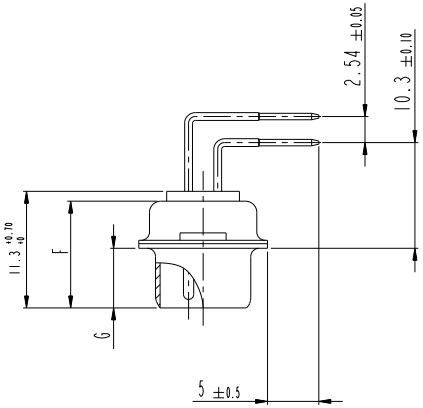

LAYOUT DIMENSIONS

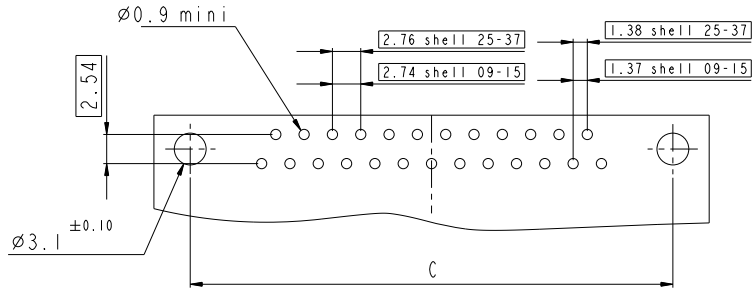

SCALE:3

www.fciconnect.com			surface ISO 1302	tolerance std ISO 406 ISO 1101		projection	mm
			TOLERANCES UNLESS OTHERWISE SPECIFIED				
Dr	M PESSON	2006/11/14	ANGULAR	LINEAR	0.X ±0.3	size A2	Scale 2:1
Eng	P LEGARE	2006/11/14			0.XX ±0.1		
Chr	P LEGARE	2006/11/14	0° ±2°		0.XXX ±0.05	ECN LS08-0119	
Appr	P LEGARE	2006/11/14	Product family -			Spec ref	
Title	SUB MALE DM HE501 series with right angle contact				dwg no C01-8637-1740		Rev. C
catalog no -					CUSTOMER	sheet 4 of 9	

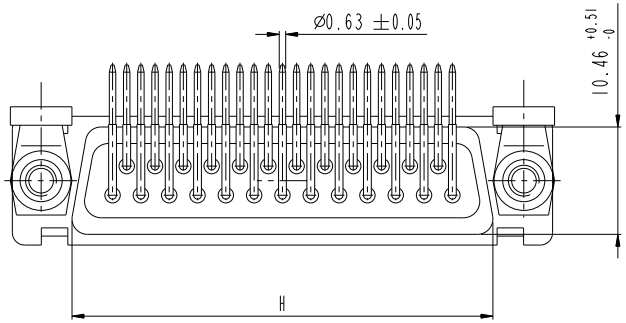

DIMENSION FOR SHELL E,A,B,C WITH METAL BRACKET

Dimensions are in millimeters

Shell size	Number of contacts	A +0.76 -0	B +0.25 -0	C ±0.12	F +0.57 -0	G +0.25 -0	H +0.51 -0	L +0.22 -0
E	09	30.43	16.79	24.99	10.47	5.9 +0.15 -0	19.02	0.80
A	15	38.76	25.12	33.32	10.47	5.9 +0.15 -0	27.25	0.80
B	25	52.65	38.84	47.04	10.43	5.7 +0.25 -0	41.02	0.80
C	37	68.94	55.30	63.50	10.56	5.7 +0.25 -0	57.45	0.90

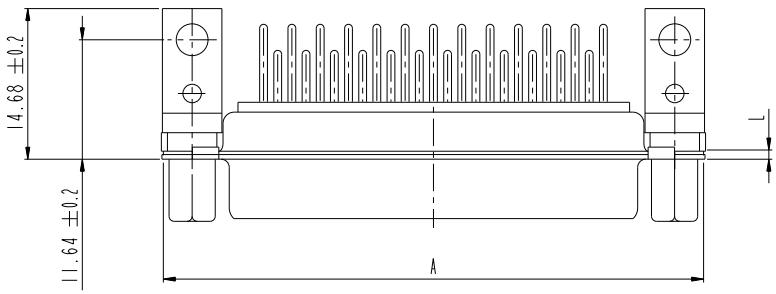

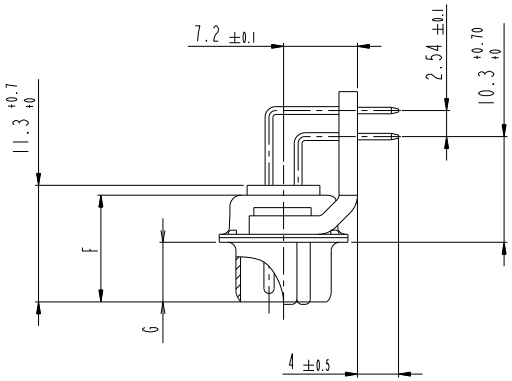

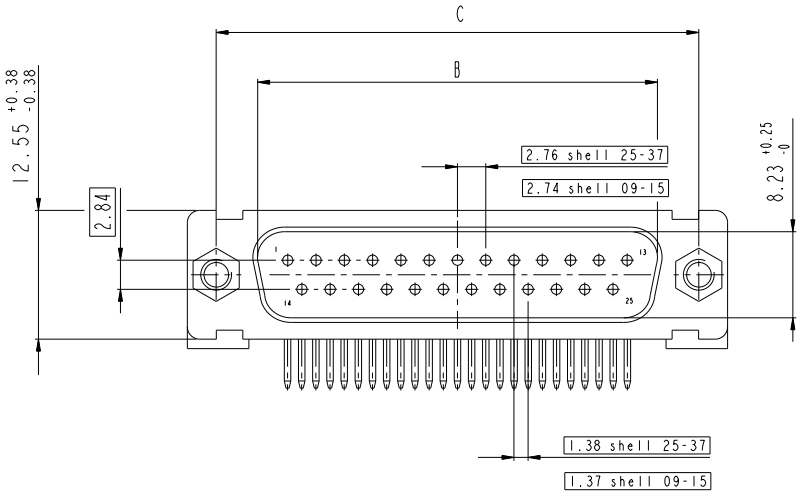

LAYOUT DIMENSIONS

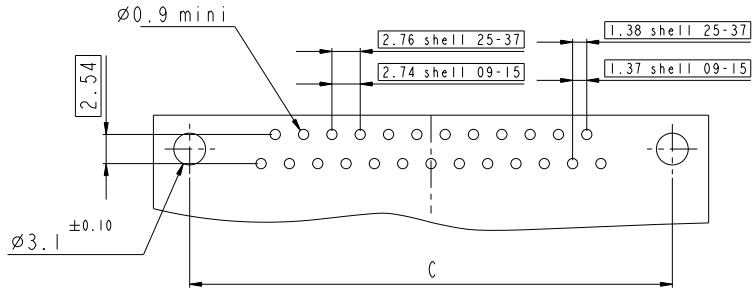

SCALE:3

www.fciconnect.com			surface ISO 1302	tolerance std ISO 406 ISO 1101		projection	mm
			TOLERANCES UNLESS OTHERWISE SPECIFIED				
Dr	M PESSON	2006/11/14	ANGULAR	LINEAR	0.X ±0.3	size A2	Scale 2:1
Eng	P LEGARE	2006/11/14			0.XX ±0.1		
Chr	P LEGARE	2006/11/14	0° ±2°		0.XXX ±0.05	ECN LS08-0119	
Appr	P LEGARE	2006/11/14	Product family -			Spec ref	
Title	SUB MALE DM HE501 series with right angle contact				dwg no C01-8637-1740		Rev. C
catalog no -					CUSTOMER	sheet 5 of 9	

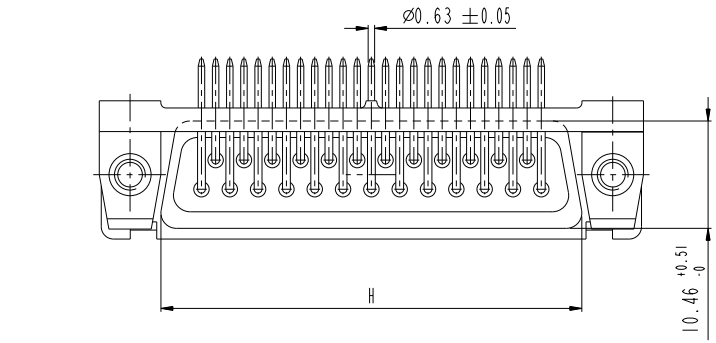

DIMENSION FOR SHELL E,A,B,C WITH PLASTIC BRACKET

Dimensions are in millimeters

Shell size	Number of contacts	A +0.76 -0	B +0.25 -0	C ±0.12	F +0.57 -0	G +0.25 -0	H +0.51 -0	L +0.22 -0
E	09	30.43	16.79	24.99	10.47	5.9 +0.15 -0	19.02	0.80
A	15	38.76	25.12	33.32	10.47	5.9 +0.15 -0	27.25	0.80
B	25	52.65	38.84	47.04	10.43	5.7 +0.25 -0	41.02	0.80
C	37	68.94	55.30	63.50	10.56	5.7 +0.25 -0	57.45	0.90

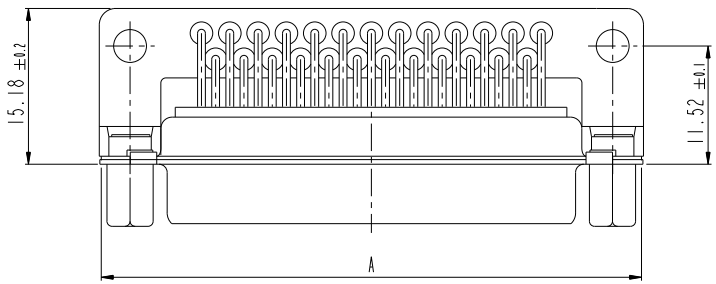

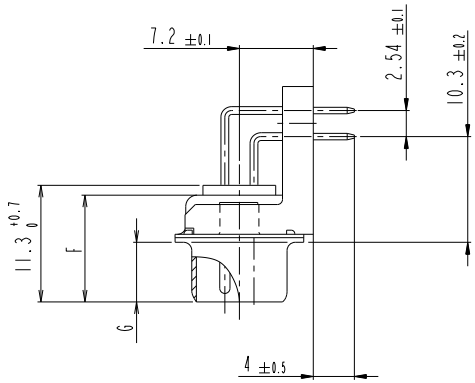

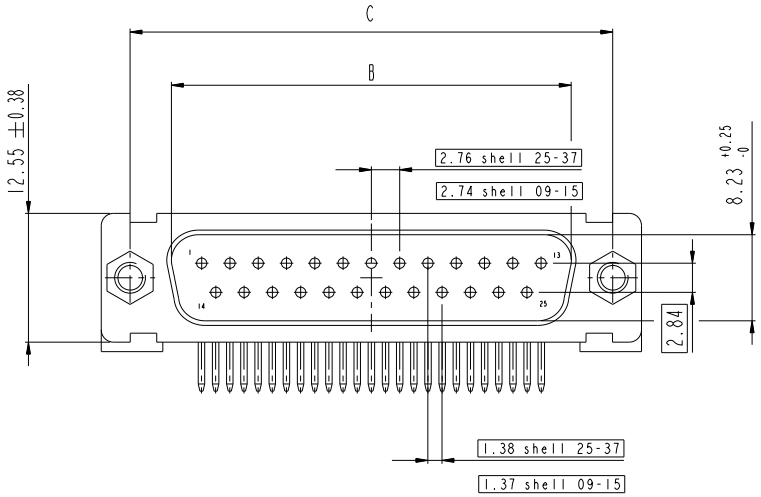

LAYOUT DIMENSIONS

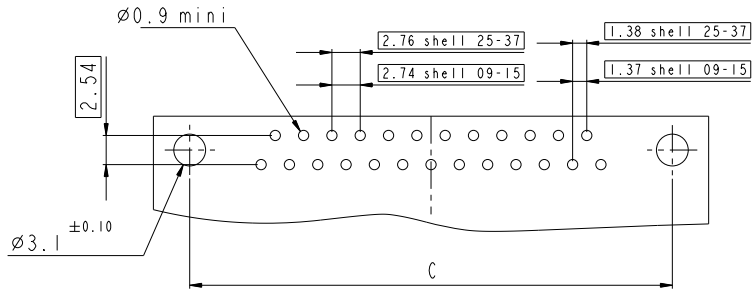

www.fciconnect.com			surface ISO 1302	tolerance std ISO 406 ISO 1101		projection	mm
			TOLERANCES UNLESS OTHERWISE SPECIFIED				
Dr	M PESSON	2006/11/14	ANGULAR	LINEAR	0.X ±0.3	size A2	Scale 2:1
Eng	P LEGARE	2006/11/14			0.XX ±0.1		
Chr	P LEGARE	2006/11/14	0° ±2°		0.XXX ±0.05	ECN	LS08-0119
Appr	P LEGARE	2006/11/14	Product family			Spec ref	
Title	SUB MALE DM HE501 series with right angle contact					dwg no C01-8637-1740	Rev. C
catalog no						CUSTOMER	sheet 6 of 9

DIMENSION FOR SHELL D WITHOUT BRACKET (50 CONTACTS)

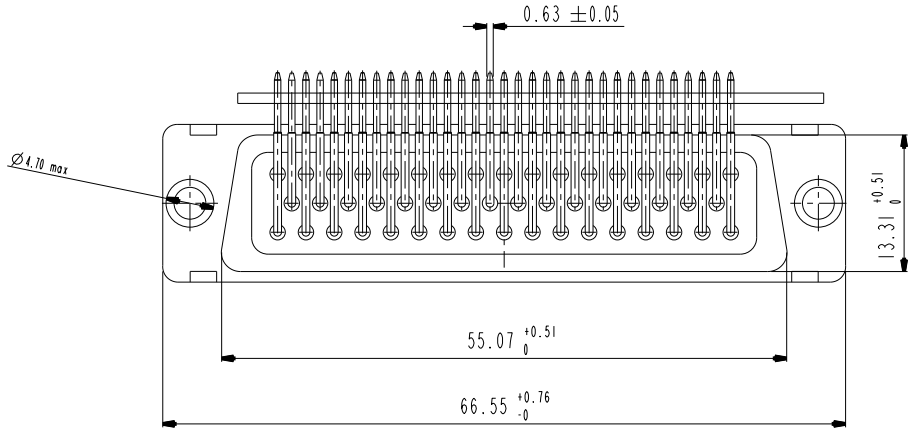

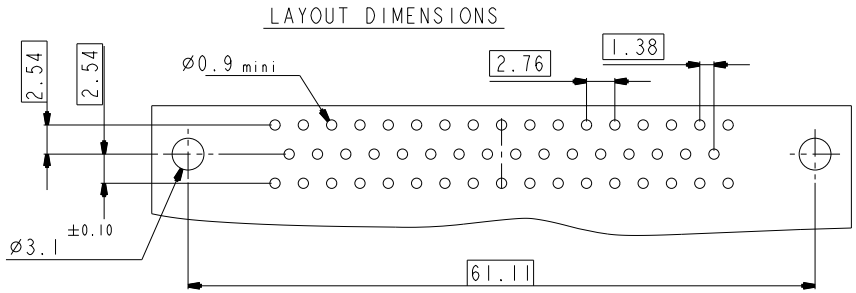

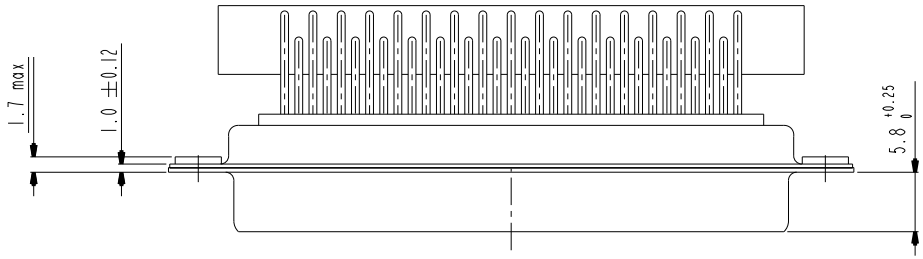

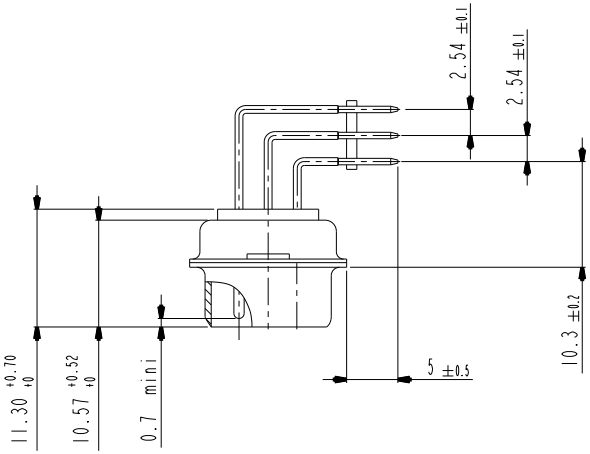

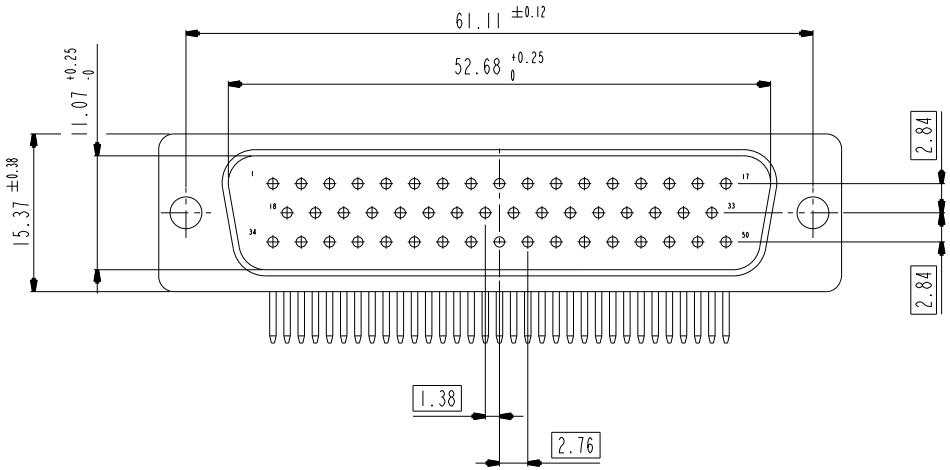

www.fciconnect.com			surface ISO 1302		tolerance std ISO 406 ISO 1101		projection	mm
			TOLERANCES UNLESS OTHERWISE SPECIFIED					
Dr	M PESSON	2006/11/14	ANGULAR	LINEAR	0.X	±0.3	size A2	Scale 2:1
Eng	P LEGARE	2006/11/14			0.XX	±0.1		
Chr	P LEGARE	2006/11/14	0° ±2°		0.XXX	±0.05	ECN	LS08-0119
Appr	P LEGARE	2006/11/14	Product family			-	Spec ref	
Title	SUB MALE DM HE501 series with right angle contact						dwg no C01-8637-1740	Rev. C
catalog no							CUSTOMER	sheet 7 of 9

REV F - 2006-06-17

DIMENSION FOR SHELL D WITH METAL BRACKET (50 CONTACTS)

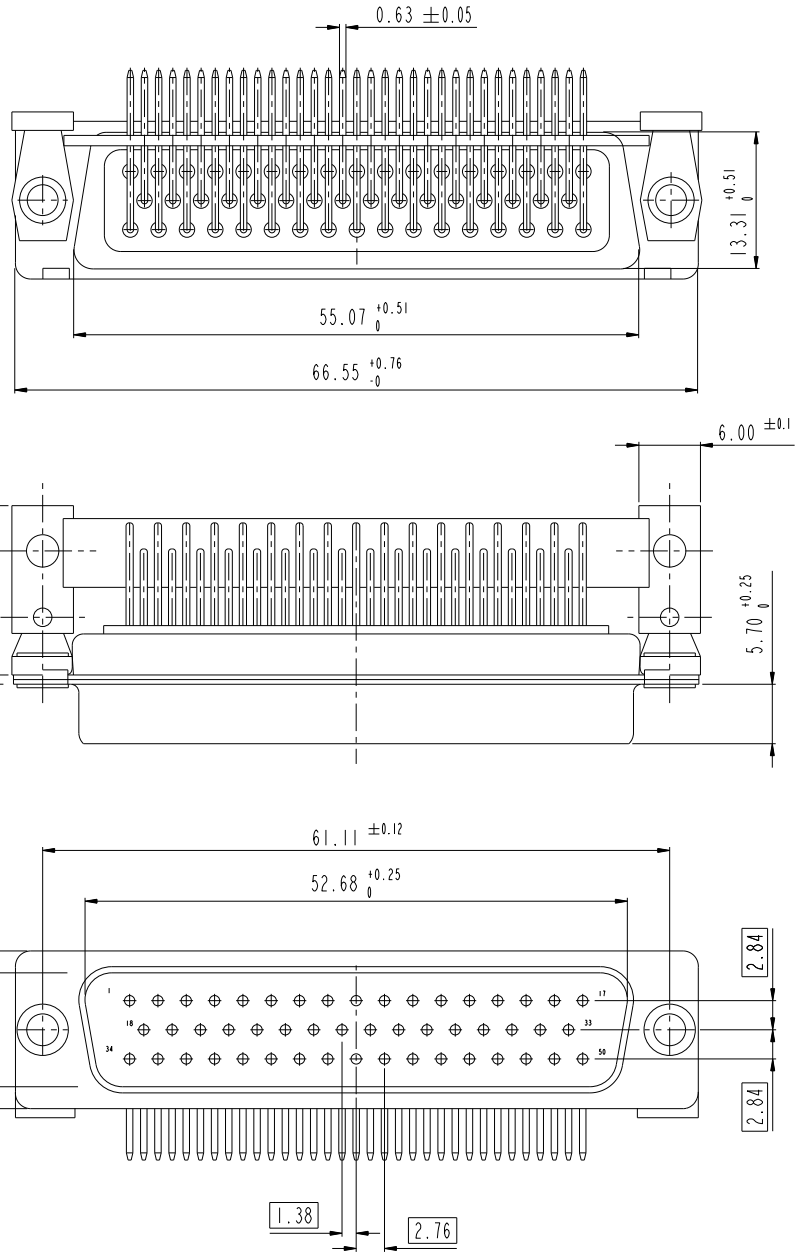

LAYOUT DIMENSIONS

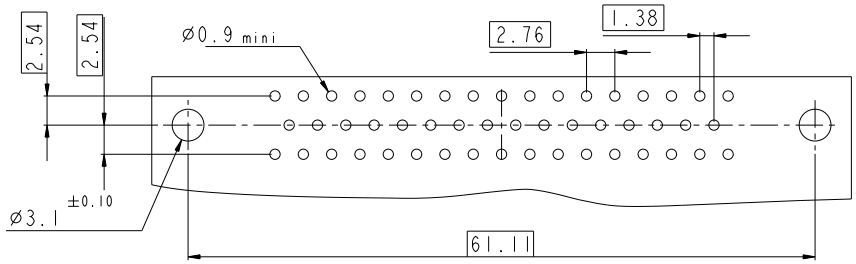

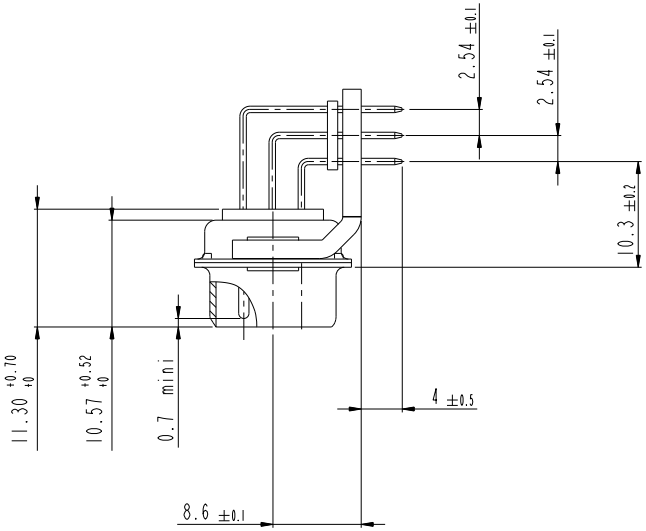

www.fciconnect.com			surface ISO 1302		tolerance std ISO 406 ISO 1101		projection	mm
			TOLERANCES UNLESS OTHERWISE SPECIFIED					
Dr	M PESSON	2006/11/14	ANGULAR	LINEAR	0.X	±0.3	size A2	Scale 2:1
Eng	P LEGARE	2006/11/14			0.XX	±0.1		
Chr	P LEGARE	2006/11/14	0° ±2°		0.XXX	±0.05	ECN	LS08-0119
Appr	P LEGARE	2006/11/14	Product family				Spec ref	
Title	SUB MALE DM HE501 series with right angle contact						dwg no C01-8637-1740	Rev. C
catalog no							CUSTOMER	sheet 8 of 9

DIMENSIONS FOR SHELL SIZE D WITH PLASTIC BRACKET (50 CONTACTS)

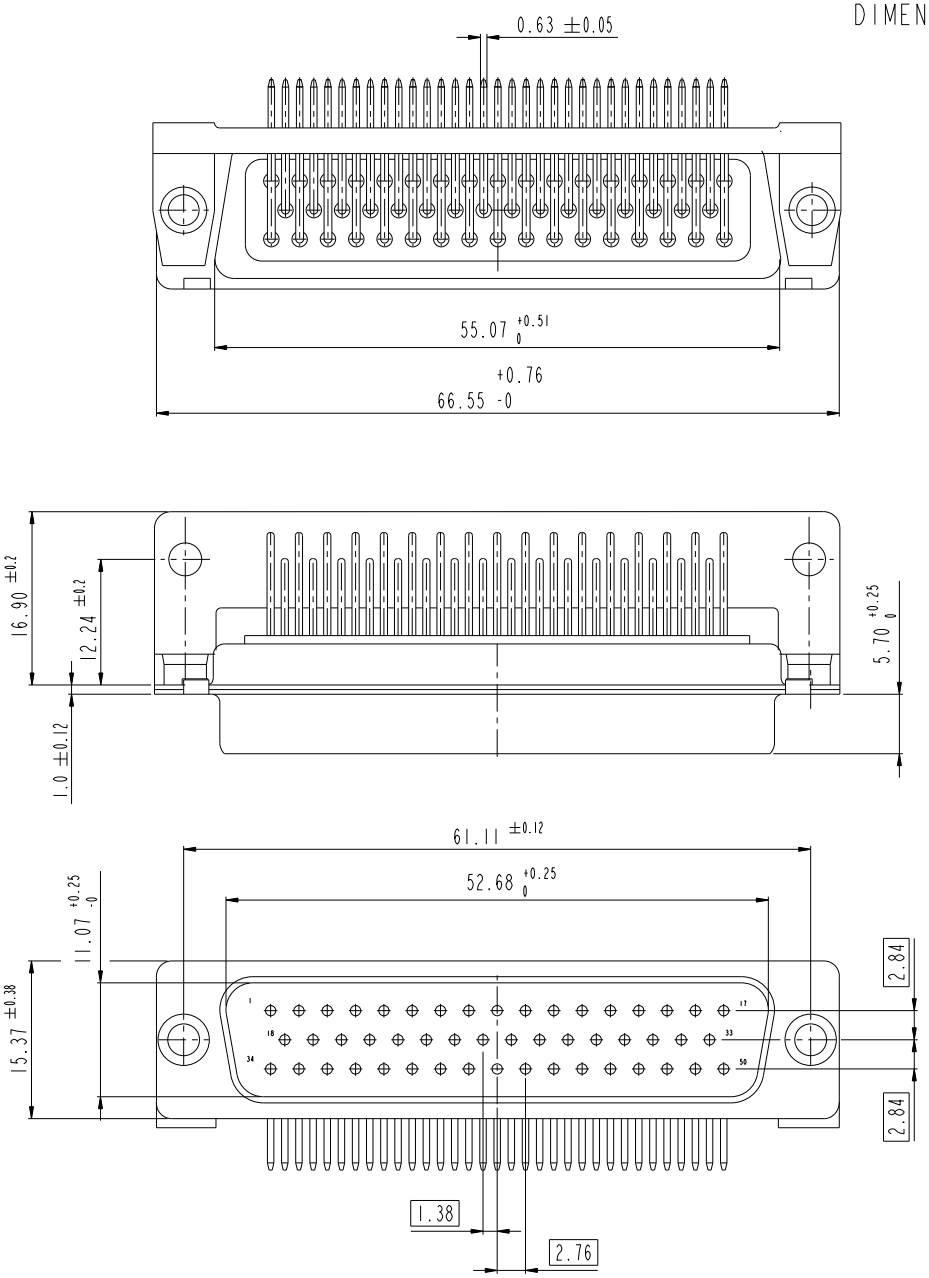

LAYOUT DIMENSIONS

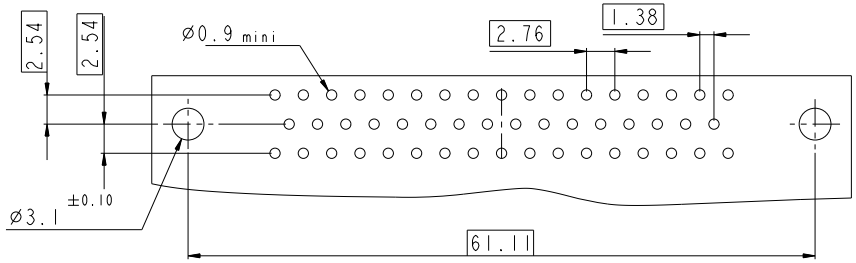

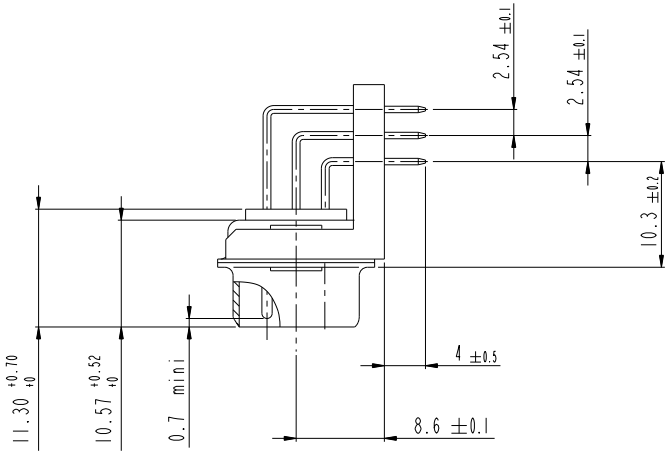

www.fciconnect.com			surface ISO 1302	tolerance std ISO 406 ISO 1101		projection	mm
			TOLERANCES UNLESS OTHERWISE SPECIFIED				
Dr	M PESSON	2006/11/14	ANGULAR	LINEAR	0.X ±0.3	size A2	Scale 2:1
Eng	P LEGARE	2006/11/14			0.XX ±0.1		
Chr	P LEGARE	2006/11/14	0° ±2°		0.XXX ±0.05	ECN	LS08-0119
Appr	P LEGARE	2006/11/14	Product family			Spec ref	
Title	SUB MALE DM HE501 series with right angle contact					dwg no C01-8637-1740	Rev. C
catalog no						CUSTOMER	sheet 9 of 9