THIS COPY IS PROVIDED ON A RESTRICTED BASIS AND IS NOT TO BE USED IN ANY WAY DETRIMENTAL TO THE INTERESTS OF PANDUIT CORP.

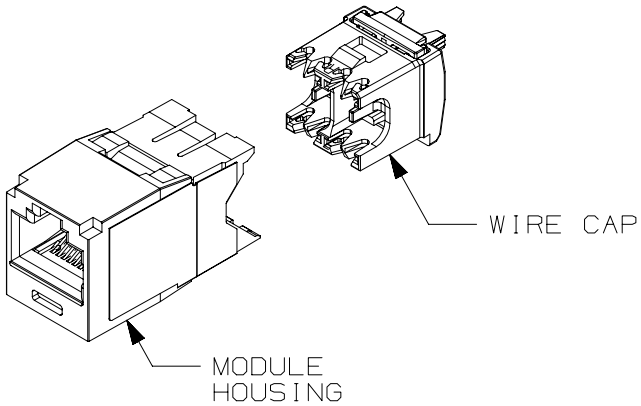

NOTES:
1. VISIT OUR ON-LINE CATALOG AT WWW.PANDUIT.COM FOR A LIST OF CURRENT PARTS APPLICABLE FOR USE WITH THIS PRODUCT.
2. BLUE COLOR WIRE CAP ASSEMBLY DESIGNATES TIA CATEGORY 6A (ISO 11801 CLASS EA) PERFORMANCE.
3. COLOR OF JACK MODULE IS INDICATED BY ** IN THE PART NUMBER (EXAMPLE: CJ6X88TGBU FOR BLUE JACK). SEE WWW.PANDUIT.COM FOR AVAILABLE COLOR CODES.
4. PART NUMBERS OF AVAILABLE PACKAGE TYPES ARE SHOWN IN TABLE 1.
5. TERMINATION TOOL TO BE USED IS EGJT-1. SOME PACKAGE TYPES INCLUDE A TERMINATION TOOL, SEE TABLE 1 FOR DETAILS.
6. ALL TX6A™ 10GIG™ CATEGORY 6A, 8 POSITION, 8 WIRE CONNECTOR MODULES ARE UNIVERSAL IN DESIGN. THEY ACCEPT ACCCEPT SIX AND EIGHT POSITION MODULAR PLUGS WITHOUT DAMAGE.
7. TERMINATES 22-26AWG SOLID OR STRANDED UTP CABLE HORIZONALLY.
8. SEE INSTALLATION INSTRUCTION FOR PROPER TERMINATION METHOD.
9. WIRE CAP LABEL WHICH IS PART OF THE WIRE CAP ASSEMBLY IS CODED FOR T568A AND T568B WIRING SCHEMES.
10. PART INCLUDES:
    MODULE HOUSING: ABS W/ UL94V-0 FLAME RATING.
    WIRE CAP ASSEMBLY: POLYCARBONATE W/ UL94V-0 FLAME RATING.
11. WEIGHT: 1.53 LBS/100 PCS (695 g/100 PCS).
12. DIMENSIONS IN [ ] ARE METRIC.
13. ALL MATERIALS AND COMPONENTS USED MEET THE LATEST RoHS REQUIREMENTS.

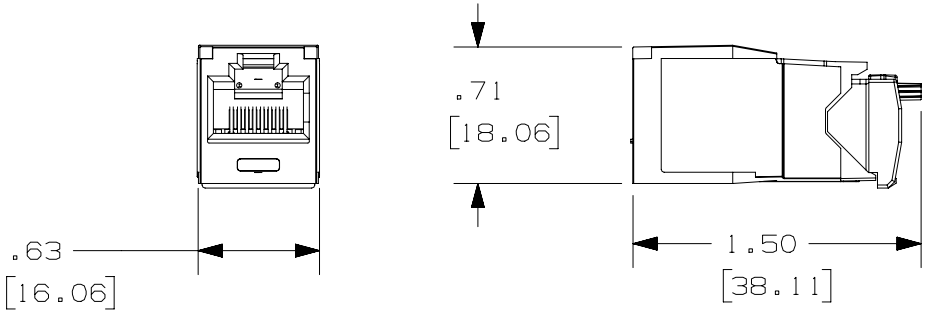

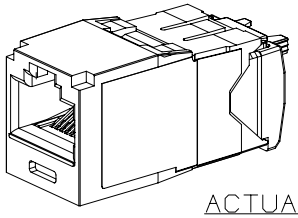

ACTUAL SIZE

TABLE 1: PACKAGE TYPE AND TERMINATION TOOL		
PART NUMBER	PACKAGED QUANTITY	TERMINATION TOOL: EGJT-1
CJ6X88TG**	INDIVIDUAL PACKAGED, 50 PER CARTON	NOT INCLUDED
CJ6X88TG**-24	BULK PACKAGED, 24 PER BAG	INCLUDED (1 PER BAG)
CJ6X88TG**-C	BULK PACKAGED, 100 PER CARTON	INCLUDED (1 PER CARTON)

PART NUMBER: SEE TABLE 1

TITLE: TX6A™ 10GIG™ CATEGORY 6A JACK MODULE WITH STRAIGHT WIRE CAP ASSEMBLY

CUSTOMER DRAWING

ITEM REVISION NAME: M01874BB/17

DATASET FILE NAME: M01874BB_DC40/17B

THIRD ANGLE PROJECTION

PANDUIT

MATERIAL: SEE NOTE 10

DRAWING NUMBER: 01874-40

DRAWN BY	DATE	CHK	SCALE		SIZE
MDJR	9-29-04	PBD	FULL	SHEET 1 OF 1	A

REV	DATE	BY	CHK	APR	DESCRIPTION	ECN
9	10-25-18	BJN	DCS	TMBA	UPDATED NOTES; ADDED TABLE 1	01874-40

A-SIZE CUSTOMER